80BLF-2530HBB

电机尺寸
DIMENSIONS:
(UNIT=MM)

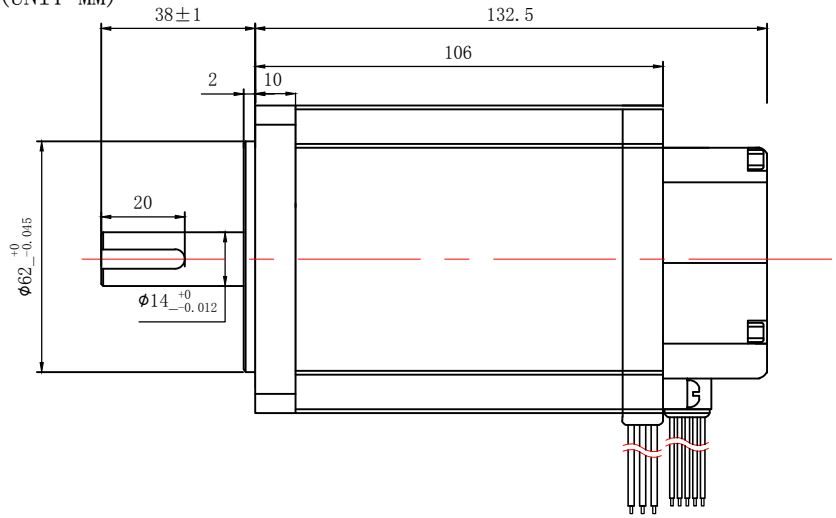

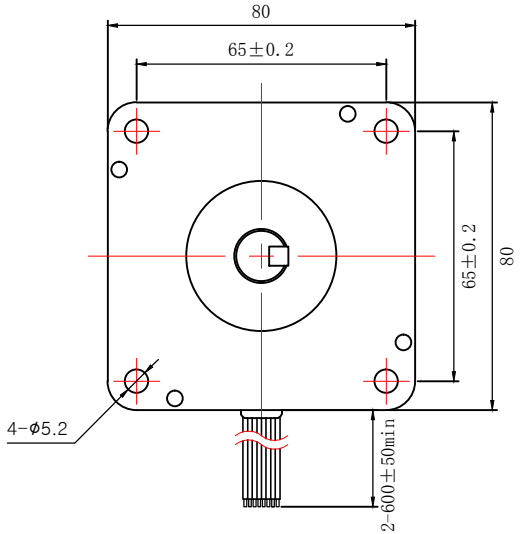

NOTES:
1. PLEASE DON'T HOLD MOTOR BY LEAD WIRES.
2. PLEASE DON'T PLUG IN/OUT THE MOTOR CONNECTOR WHILE POWER ON.
3. PLEASE DON'T DROP, HURL OR DUMP MOTOR AGAINST HARD MATERIAL MALFUNCTION MAY NOT BE OBSERVED AT EARLY STAGE AFTER SUCH SHOCKS, BUT FOUND LATER. THE MISHANDLING VOIDS OUR WARRANTY.
4. DONGGUAN ICAN-TECH WILL NOT BE RESPONSIBLE FOR ANY PATENT DISPUTE OR PROBLEM CAUSED BY ACTUAL APPLICATIONS

驱动连接方式
CONNECTION MODE:

连接方式 CONNECTION MODE	MOTOR CABLES 3"UL3265 AWG18#			HALL SENSOR CABLES 5"UL1007 AWG24#				
电机线 MOTOR LINE	粗黄	粗绿	粗蓝	细黄	细绿	细蓝	细黑	细红
驱动器接口 DRIVER INTERFACE	U	V	W	HU	HV	HW	REF-	REF+

电机参数/ELECTRICAL PARAMETER		轴径配置/SHAFT DESIGH
电机型号 MANUFACTURER MODEL	80BLF-2530HBB	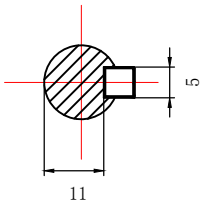
适配直流无刷电机驱动控制器 MATCHED MOTOR DRIVE	BLDH350	
额定功率 RATED POWER (W)	250	
额定转速 RATED SPEED (RPM±10%)	3000	
电机电压 RATED VOLTAGE (V)	310	
电机电阻 RESISTANCE (Ω±15%)		
电机电感 INDUCTANCE (mH+20%)		
电机力矩 HOLDING TORQUE (N.M)	0.8	
磁极数 NUMBER OF POLES	8	

制图 DESIGNED	检图 CHECKED	校准 APPROVED	日期 DATE	比例 SCALE
HUANG TING	MA HUALING		2016/03/01	1:2
80BLF-2530HBB		东莞市一能机电技术有限公司 DONGGUAN ICAN TECHNOLOGY CO.,LTD		
直流无刷电机 BRUSHLESS DC MOTOR				版本 EDITION V2.0