GFC aluminum alloy plum flower clamp series

Features :

- > Bushings made of High-strength aluminum alloy
- > Zero backlash , Suitable for forward reverse
- > Colloid using TPU, with good abrasion resistance Oil resistance and Insulation
- > Colloid can absorb vibration、parallel、angular misalignments and shaft end-play
- > Detachable design, Easy installation
- > Clamp type

● Outside Diam Φ14~Φ35

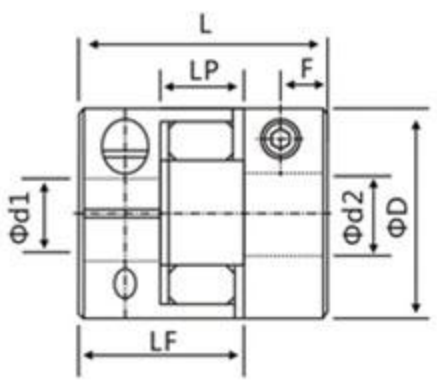

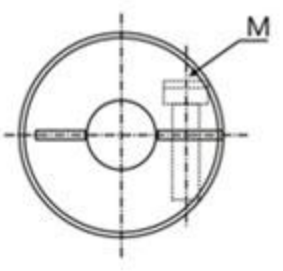

● Outside Diam Φ40

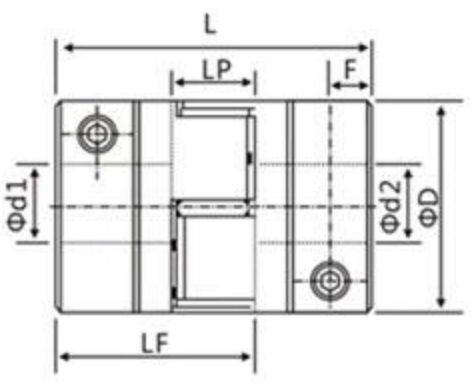

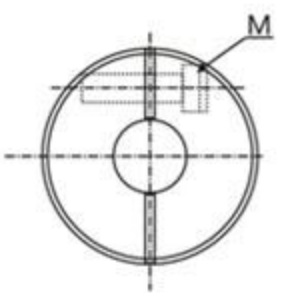

● Outside Diam Φ55~Φ120

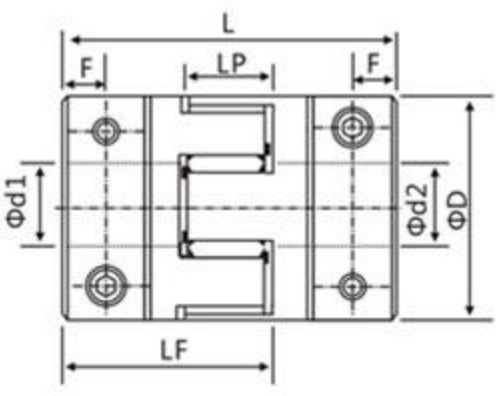

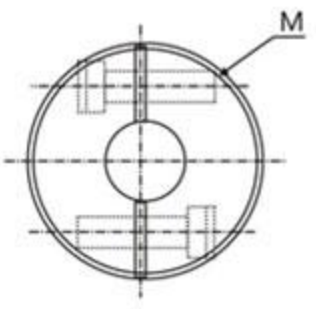

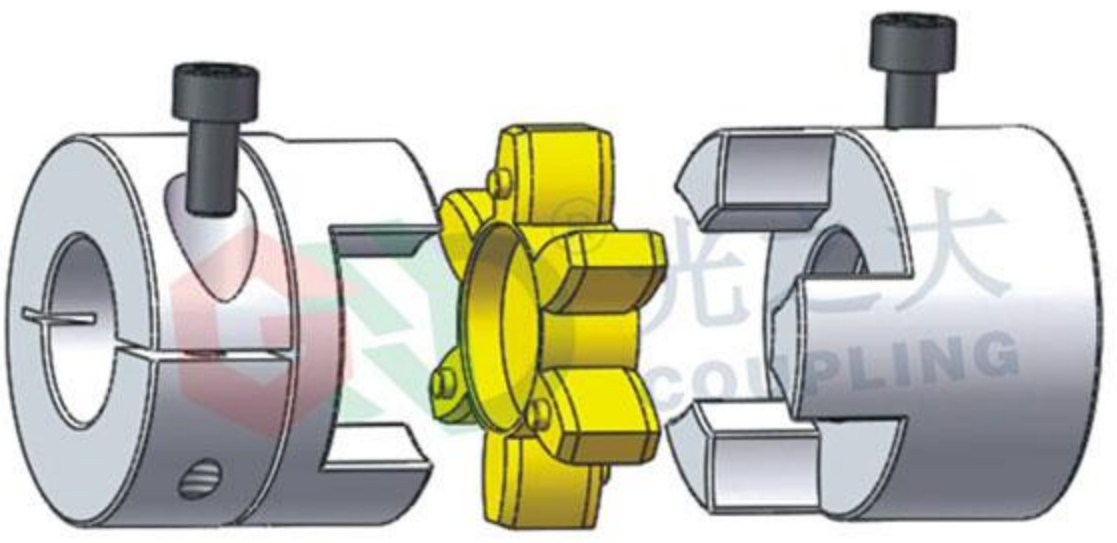

Example: GFC - □□ × □□ - □□ × □□

Series Diameter Lenght d1Bore d2Bore

Example:GFC-55×78-16×20
G:Guangzhida
F:Plum flower
C:Clamp
55:Diameter
78:Length
16:d1bore
20:d2bore

Dimensions (unit : mm)

Parameter / Model NO.	Commom Φd1,Φd2 shaft diameter	ΦD	L	LF	LP	F	M	Wrench Torqe (N.m)
GFC-14×22	3,4,5,6,6.35	14	22	14.3	6.6	3.8	M2.5	0.8
GFC-20×25	3,4,5,6,6.35,7,8,9,9.525,10	20	25	16.8	8.6	4.6	M3	1.2
GFC-20×30	3,4,5,6,6.35,7,8,9,9.525,10	20	30	19.25	8.6	5.4	M3	1.2
GFC-25×30	4,5,6,6.35,7,8,9,9.525,10,11,12	25	30	20.82	11.6	4.6	M4	2.5
GFC-25×34	4,5,6,6.35,7,8,9,9.525,10,11,12	25	34	22.82	11.6	5.6	M4	2.5
GFC-30×35	5,6,6.35,7,8,9,10,11,12,12.7,14,15,16	30	35	23.0	10.9	5.9	M4	2.5
GFC-30×40	5,6,6.35,7,8,9,10,11,12,12.7,14,15,16	30	40	25.5	10.9	7.0	M4	2.5
GFC-35×50	5,6,6.35,7,8,9,10,11,12,12.7,14,15,16,17,18,19	35	50	30.5	11.5	6.5	M5	5
GFC-40×50	6,8,9,10,11,12,12.7,14,15,16,17,18,19,20,22,24	40	50	32.1	13.7	6.7	M5	5
GFC-40×55	6,8,9,10,11,12,12.7,14,15,16,17,18,19,20,22,24	40	55	34.5	13.7	7.2	M5	5
GFC-40×66	6,8,9,10,11,12,12.7,14,15,16,17,18,19,20,22,24	40	66	40.0	13.7	8.0	M5	5
GFC-55×49	10,11,12,12.7,14,15,16,17,18,19,20,22,24,25,28,30,32	55	49	32.0	16.1	6.5	M6	8
GFC-55×78	8,10,12,12.7,14,15,16,17,18,19,20,22,24,25,28,30,32	55	78	46.4	16.1	10.3	M6	8
GFC-65×80	14,15,16,17,18,19,20,22,24,25,28,30,32,35,38,40	65	80	48.5	16.7	14.0	M8	20
GFC-65×90	14,15,16,17,18,19,20,22,24,25,28,30,32,35,38,40	65	90	53.5	16.7	11.9	M8	20
GFC-80×114	19,20,22,24,25,28,30,32,35,38,40,42,45	80	114	68.0	22.5	15.5	M8	20
GFC-95×126	19,20,22,24,25,28,30,32,35,38,40,42,45,50,55	95	126	74.5	24.0	15.0	M10	40
GFC-105×140	20,22,24,25,28,30,32,35,38,40,42,45,50,55,60	105	140	83.2	26.4	21	M10	40
GFC-120×160	22,24,25,28,30,32,35,38,40,42,45,50,55,60,65	120	160	93.7	27.4	26	M12	75

Specifications

Parameter / Model NO.	Rated Torque (N.m) *	Errors of Eccentricity (mm) *	Errors of Angularity (°) *	Errors of Shaft end-play (mm) *	Max.Rotational Frequency (rpm)	Static Torsional Stiffness (N.m/rad)	Moment of Inertia (kg.m²)	Bushings' material	Colloid' material	Surface treatment	Mass (g)
GFC-14×22	1.1	0.02	1	+0.6 0	19000	46	2.0×10^{-7}	High strength aluminum alloy	TPU	anodic oxidation	10
GFC-20×25	2.8	0.02	1	+0.6 0	17000	55	1.0×10^{-6}				15
GFC-20×30	2.8	0.02	1	+0.6 0	17000	55	1.1×10^{-6}				19
GFC-25×30	6	0.02	1	+0.6 0	16000	65	5.2×10^{-6}				33
GFC-25×34	6	0.02	1	+0.6 0	16000	65	5.2×10^{-6}				42
GFC-30×35	6.5	0.02	1	+0.6 0	12000	72	6.2×10^{-6}				50
GFC-30×40	6.5	0.02	1	+0.6 0	12000	72	6.2×10^{-6}				60
GFC-35×50	15	0.02	1	+0.6 0	10000	200	8.1×10^{-6}				45
GFC-40×50	32	0.02	1	+0.8 0	10000	450	3.8×10^{-5}				115
GFC-40×55	32	0.02	1	+0.8 0	10000	500	3.8×10^{-5}				127
GFC-40×66	32	0.02	1	+0.8 0	10000	550	3.9×10^{-5}				154
GFC-55×49	46	0.02	1	+0.8 0	8000	1200	1.6×10^{-3}				241
GFC-55×78	46	0.02	1	+0.8 0	8000	1500	1.6×10^{-3}				341
GFC-65×80	109	0.02	1	+0.8 0	6000	2600	3.8×10^{-3}				433
GFC-65×90	109	0.02	1	+0.8 0	6000	2800	3.8×10^{-3}				583
GFC-80×114	135	0.02	1	+1.0 0	4600	3500	1.8×10^{-3}				1000
GFC-95×126	250	0.02	1	+1.0 0	3800	4600	2.0×10^{-3}				1650
GFC-105×140	420	0.02	1	+1.0 0	3400	5400	3.2×10^{-3}				2640
GFC-120×160	520	0.02	1	+1.0 0	3000	6500	4.5×10^{-3}				3230

Moment of inertia and mass figures based on the maximun shaft bores