# GS aluminum alloy single diaphragm Clamp series

**Features :**

- > Bushings made of High-strength aluminum alloy
- > The diaphragm is made of 304 stainless steel
- > With high torque capacity, can accurately control shaft rotation, high precision control can be performed
- > For servomotor/stepmotor connect
- > Zero backlash , Suitable for forward reverse
- > Low rotational inertia, suitable for high-speed operation
- > Clamp type

● Outside Diam Φ19~Φ44

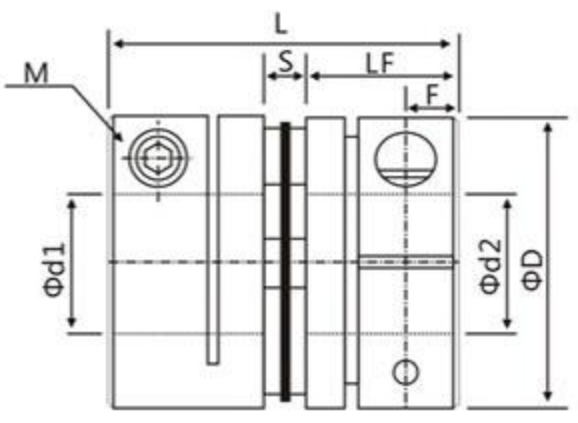


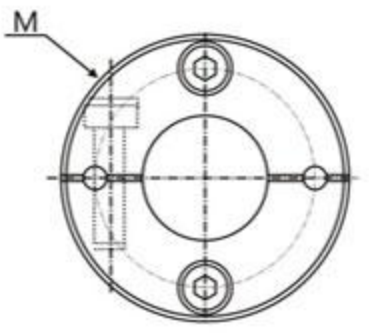

● Outside Diam Φ50~Φ126

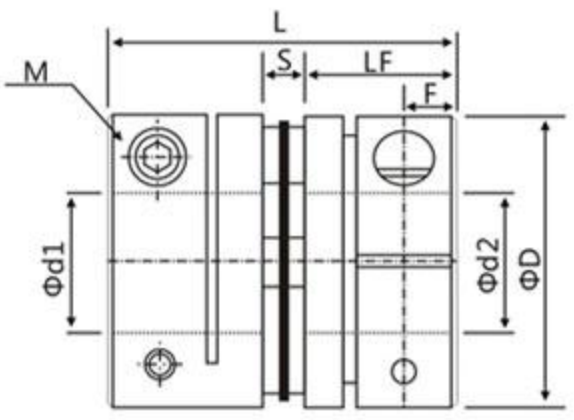


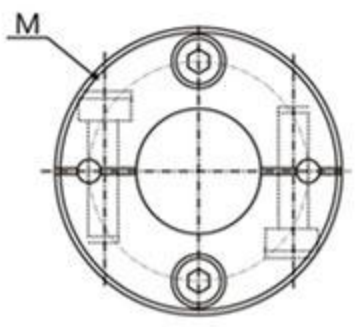

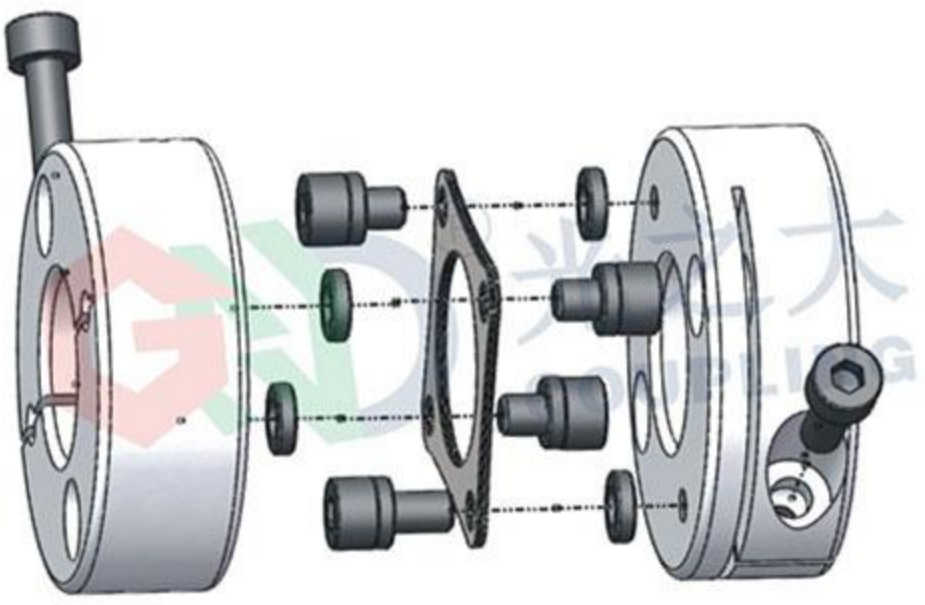

Example: GS - □□ × □□ - □□ × □□

Series Diameter Lenght d1Bore d2Bore

Example:GS-32×28-8×9
G:Guangzhida
S:Short
32:Diameter
28:Length
8:d1 bore
9:d2 bore

## Dimensions ( unit : mm )

| Parameter / Model NO. | Commom Φd1,Φd2 shaft diameter | ΦD | L | LF | S | F | M | Wrench Torqe ( N.m ) |
|---|---|---|---|---|---|---|---|---|
| GS-19×20 | 3,4,5,6,6.35,7,8 | 19 | 20 | 9.1 | 1.8 | 3.3 | M2.5 | 0.8 |
| GS-26×26 | 3,4,5,6,6.35,7,8,9,9.525,10,11,12,14 | 26 | 26 | 11.65 | 2.6 | 3.9 | M3 | 1.2 |
| GS-32×28 | 5,6,6.35,7,8,9,9.525,10,11,12,12.7,14,15 | 32 | 28 | 12.25 | 3.5 | 3.85 | M3 | 1.2 |
| GS-34×32 | 5,6,6.35,7,8,9,9.525,10,11,12,12.7,14,15,16 | 34 | 32 | 14.25 | 3.5 | 4.5 | M4 | 2.5 |
| GS-39×34.5 | 8,9,9.525,10,11,12,12.7,14,15,16,17,18,19 | 39 | 34.5 | 14.9 | 4.5 | 5 | M4 | 2.5 |
| GS-44×34.5 | 8,9,9.525,10,11,12,12.7,14,15,16,17,18,19,20,22,24 | 44 | 34.5 | 14.9 | 4.5 | 5 | M4 | 2.5 |
| GS-50×41 | 8,9,9.525,10,11,12,12.7,14,15,16,17,18,19,20,22,24,25 | 50 | 41 | 18.1 | 4.8 | 5.8 | M5 | 5 |
| GS-56×45 | 10,12,14,15,16,17,18,19,20,22,24,25,28,30,32 | 56 | 45 | 19.75 | 5.5 | 6.4 | M5 | 5 |
| GS-68×53 | 12,14,15,16,17,18,19,20,22,24,25,28,30,32,35,38 | 68 | 53 | 23.35 | 6.3 | 7.7 | M6 | 8 |
| GS-82×68 | 17,18,19,20,22,24,25,28,30,32,35,38,40,42 | 82 | 68 | 30 | 8.0 | 9.7 | M8 | 20 |
| GS-94×68 | 19,20,22,24,25,28,30,32,35,38,40,42,43,44,45 | 94 | 68 | 30 | 8.0 | 10 | M10 | 40 |
| GS-104×70 | 20,22,24,25,28,30,32,35,38,40,42,43,44,45,46,47,48 | 104 | 70 | 30 | 10.0 | 10 | M10 | 40 |
| GS-126×78 | 20,22,24,25,28,30,32,35,38,40,42,43,44,45,46,47,55 | 126 | 78 | 33 | 12.0 | 12 | M12 | 75 |

## Specifications

| Parameter / Model NO. | Rated Torque ( N.m ) * | Errors of Eccentricity ( mm ) * | Errors of Angularity ( ° ) * | Errors of Shaft end-play ( mm ) * | Max.Rotational Frequency (rpm) | Static Torsional Stiffness ( N.m/rad ) | Moment of Inertia ( kg.m² ) | Bushings' material | Diaphragm material | Surface treatment | Mass (g) |
|---|---|---|---|---|---|---|---|---|---|---|---|
| GS-19×20 | 1 | 0.1 | 1 | ±0.09 | 10000 | 1400 | $6.7\times10^{-7}$ | High strength aluminum alloy | SUS304 | anodic oxidation | 11 |
| GS-26×26 | 1.5 | 0.1 | 1 | ±0.14 | 10000 | 3700 | $2.2\times10^{-6}$ | | | | 28 |
| GS-32×28 | 2 | 0.1 | 1 | ±0.18 | 10000 | 5700 | $7.1\times10^{-6}$ | | | | 46 |
| GS-34×32 | 3 | 0.1 | 1 | ±0.18 | 10000 | 8100 | $8.0\times10^{-6}$ | | | | 55 |
| GS-39×34.5 | 6 | 0.1 | 1 | ±0.23 | 10000 | 18000 | $2.2\times10^{-5}$ | | | | 81 |
| GS-44×34.5 | 9 | 0.1 | 1 | ±0.27 | 10000 | 20000 | $2.8\times10^{-5}$ | | | | 99 |
| GS-50×41 | 18 | 0.1 | 1 | ±0.30 | 10000 | 32000 | $2.5\times10^{-5}$ | | | | 135 |
| GS-56×45 | 25 | 0.1 | 1 | ±0.36 | 10000 | 50000 | $1.2\times10^{-4}$ | | | | 217 |
| GS-68×53 | 60 | 0.1 | 1 | ±0.4 | 9000 | 70000 | $1.5\times10^{-4}$ | | | | 348 |
| GS-82×68 | 80 | 0.1 | 1 | ±0.5 | 8000 | 140000 | $1.8\times10^{-4}$ | | | | 689 |
| GS-94×68 | 165 | 0.1 | 1 | ±0.7 | 8000 | 100000 | $1.23\times10^{-3}$ | | | | 960 |
| GS-104×70 | 235 | 0.1 | 1 | ±0.8 | 8000 | 120000 | $1.85\times10^{-3}$ | | | | 1200 |
| GS-126×78 | 350 | 0.1 | 1 | ±0.9 | 7500 | 135000 | $3.75\times10^{-3}$ | | | | 1560 |

Moment of inertia and mass figures based on the maximun shaft bores