GI aluminum alloy parallellines Setscrew series

Features:

> Integrated structure,with high-strength aluminum alloy
> The slit structure can absorb vibration、parallel、angular misalignments and shaft end-play
> Zero backlash , Suitable for forward reverse
> For encoder/micro-motor
> Setscrew type

● Short type (EX. : GI-16X16)

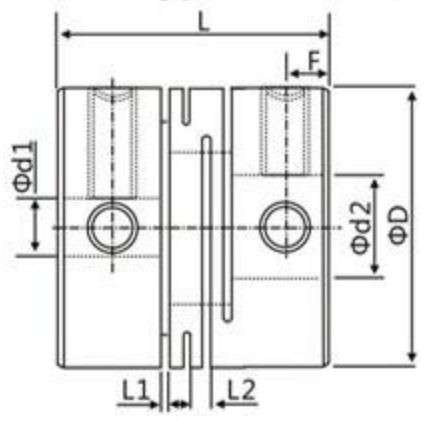

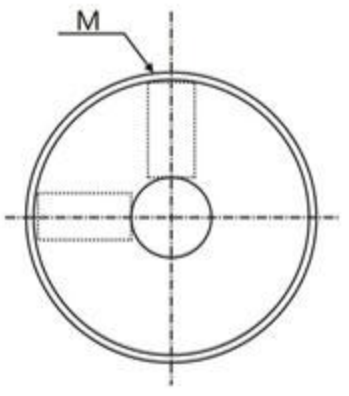

● Standard type (EX. : GI-16X23)

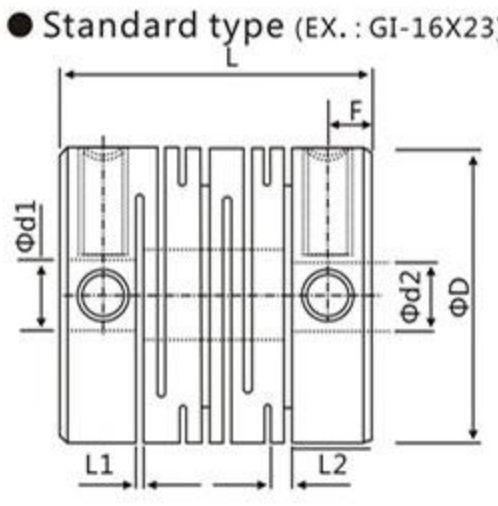

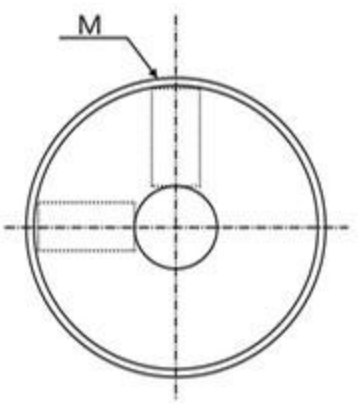

● Long type(EX. : GI-50X71)

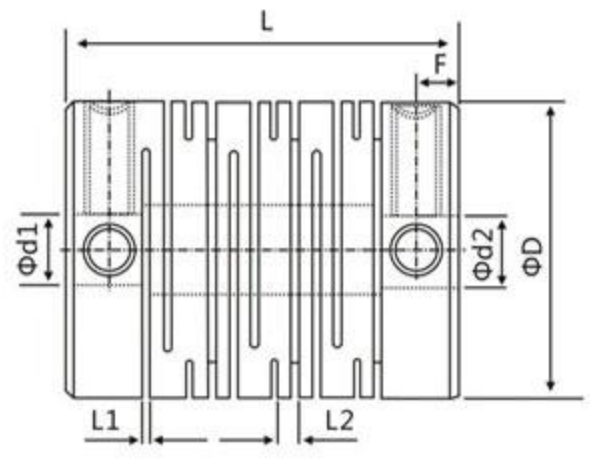

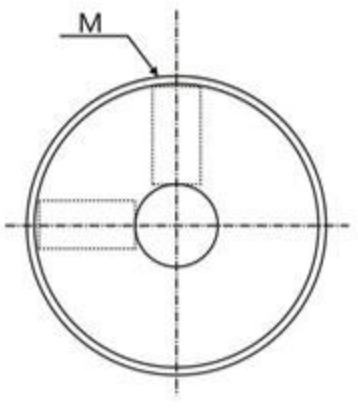

Example: GI - □□ × □□ - □□ × □□

Series Diameter Lenght d1Bore d2Bore

Example:GI-20×26-8×10
G:Guangzhida
I:Parallel lines
20:Diameter
26:Length
8:d1bore
10:d2bore

Dimensions (unit : mm)

Parameter / Model NO.	Commom Φd1,Φd2 shaft diameter	ΦD	L	L1	L2	F	M	Wrench Torqe (N.m)
GI-12×18.5	2,3,4,5,6,6.35	12	18.5	0.55	1.2	2.5	M3	1.2
GI-16×16	3,4,5,6,6.35,7,8	16	16	0.55	1.4	3.0	M3	1.2
GI-16×23	3,4,5,6,6.35,7,8	16	23	0.55	1.4	3.0	M3	1.2
GI-17.5×23	4,5,6,6.35,7,8	17.5	23	0.55	1.4	3.2	M3	1.2
GI-20×20	4,5,6,6.35,7,8,10	20	20	0.55	1.5	3.2	M4	2.5
GI-20×26	4,5,6,6.35,7,8,10	20	26	0.55	1.5	3.6	M4	2.5
GI-25×25	4,5,6,6.35,7,8,9,9.525,10,11,12,12.5,12.7	25	25	0.6	1.7	4.0	M4	2.5
GI-25×31	5,6,6.35,8,9,9.525,10,11,12,12.5,12.7	25	31	0.6	1.8	3.6	M4	2.5
GI-28.5×38	6,6.35,8,9,9.525,10,11,12,14,15,16	28.5	38	0.8	2.1	4.5	M5	5
GI-32×32	8,9,9.525,10,11,12,12.7,14,15,16,17,18	32	32	0.8	2.3	6.0	M5	5
GI-32×41	8,9,9.525,10,11,12,12.7,14,15,16,17,18	32	41	0.8	2.3	4.3	M5	5
GI-40×50	8,10,11,12,12.7,14,15,16,17,18,19,20,22,24	40	50	0.8	2.7	6.0	M6	8
GI-40×56	8,10,11,12,12.7,14,15,16,17,18,19,20,22,24	40	56	0.8	2.7	6.0	M6	8
GI-42×56	8,10,11,12,12.7,14,15,16,17,18,19,20,22,24,25	42	56	0.8	2.7	12	M6	8
GI-50×50	12,12.7,14,15,16,17,18,19,20,22,24,25,28,30	50	50	0.8	2.9	7.0	M8	20
GI-50×71	12,12.7,14,15,16,17,18,19,20,22,24,25,28,30	50	71	0.8	3.3	10	M8	20
GI-63×71	12,12.7,14,15,16,17,18,19,20,22,24,25,28,30,35	63	71	0.8	4.0	11.3	M8	20
GI-63×90	12,12.7,14,15,16,17,18,19,20,22,24,25,28,30,35	63	90	0.8	4.0	11.3	M8	20

Specifications

Parameter / Model NO.	Rated Torque (N.m) *	Errors of Eccentricity (mm) *	Errors of Angularity (°) *	Errors of Shaft end-play (mm) *	Max.Rotational Frequency (rpm)	Static Torsional Stiffness (N.m/rad)	Moment of Inertia (kg.m²)	Bushings' material	Surface treatment	Mass (g)
GI-12×18.5	0.5	0.1	1.5	±0.2	30000	31	8.3×10^{-8}	High strength aluminum alloy	anodic oxidation	3.7
GI-16×16	0.5	0.1	1.5	±0.2	24000	44	3.3×10^{-7}			6
GI-16×23	0.5	0.1	1.5	±0.2	24000	44	3.3×10^{-7}			8.1
GI-17.5×23	0.8	0.15	1.5	±0.2	24000	80	3.3×10^{-7}			10
GI-20×20	1	0.15	1.5	±0.2	19000	109	9.0×10^{-7}			12
GI-20×26	1	0.15	1.5	±0.2	19000	109	9.0×10^{-7}			15
GI-25×25	2	0.15	1.5	±0.2	15000	165	2.2×10^{-6}			23
GI-25×31	2	0.15	1.5	±0.2	15000	165	2.6×10^{-6}			27
GI-28.5×38	3	0.15	1.5	±0.2	13000	178	4.3×10^{-6}			46
GI-32×32	4	0.15	1.5	±0.2	12000	270	8.0×10^{-6}			50
GI-32×41	4	0.2	1.5	±0.2	12000	270	9.6×10^{-6}			60
GI-40×50	8	0.2	1.5	±0.2	9600	344	3.2×10^{-5}			110
GI-40×56	8	0.2	1.5	±0.2	9400	344	3.1×10^{-5}			135
GI-42×56	8.5	0.2	1.5	±0.2	9000	420	3.1×10^{-5}			165
GI-50×50	15	0.2	1.5	±0.2	8000	580	6.8×10^{-5}			220
GI-50×71	15	0.2	1.5	±0.2	7600	580	8.0×10^{-5}			322
GI-63×71	32	0.2	1.5	±0.2	5500	830	8.8×10^{-5}			511
GI-63×90	32	0.2	1.5	±0.2	5500	830	9.8×10^{-5}			630

Moment of inertia and mass figures based on the maximun shaft bores