Closed loop|stepper motor|stepper motor driver|BLDC motor|BLDC motor driver|Control project

Products Catalogue

Leading technology, smart automation

DONGGUAN ICAN TECHNOLOGY CO.,LTD

Company Profile

ICAN-TECH

Founded in 2008, Dongguan ICAN Technoloy Co., Ltd is one of the market leaders of motion control products. ICAN Technology offers a full complement of products including easy servo drives & motors (closed loop steppers), stepper motors & drivers, BLDC & BLDC drivers(basic type and high precision).

As one of the fastest growing companies, ICAN Technology provides solutions and quality products to tens of industries, and thousands of OEM clients in North & South America, Asia, Europe, Australia, and Japan. The products are widely adopted in thousands of applications such as CNC routers, lathes, laser cutters/engravers/markers, 3D printers, electronics equipments, medical equipments, packaging equipments, textile machines, robotics, pick-and-place devices, etc.

Marketing distribution

Products Application

Application Fields

- Robotics
- CNC Routers
- Lathes
- AGV
- 3D printer
- Plotters
- Textile machines
- Inkjet printers
- Laser cutters/Engraving machine
- Electronics equipments
- Medical equipments
- Semi-conductor manufacturing
- Packaging equipments
- Pick-and-place devices
- Stage lamp for entertainment
- Lithium battery

Typical Solutions

- Automatic dispensing equipment solution
- CNC Routers solution
- LED ad rotator solution
- Computer textile equipment solution
- Medical biochemical analysis equipment solution
- AGV control solution
- Plasmas cleaning equipment solution
- Intelligent medicine telling system solution
- Self-service library solution
- Logistics sorting equipment solution

Stepper products series

BLDC products series

CONTENTS

Motor driver selection table

Motor driver series	Model	Current (A)	Voltage(VDC)	Voltage(VAC)	Matched Motor	N.W.(g)	Overall Dimensions(mm)	Detail page
2 Phase stepper driver	MR2	0.3-2.5	12-50	-	28、35、42	110	94×56×21	P7
	MR4	1.0-4.2	20-50	-	57、60	270	118×76×33	P8
	MR5	2.0-5.6	20-75	-	57、60、86	270	118×76×33	P9
	MR7	2.4-7.2	18-80	18-60	60、86	390	143×96×38	P10
	MR7A	2.4-7.2	18-110	18-80	60、86	610	151×98×52	P11
	MC8H	0.5-8.0	-	85-265	110、130	880	160×127×45	P12
3 Phase stepper driver	3MR8	1.5-7.8	24-75	-	57、86	270	118×76×33	P13
	3MC8H	0.5-8.0	-	85-265	110、130	880	160×127×45	P14
Closed loop stepper driver	SS57	7.0	24-75	-	57 closed loop stepper	210	115.5×67×28	-
	SS86	8.0	20-110	24-80	86 closed loop stepper	-	-	-
	SS110	9.0	-	85-220	110 closed loop stepper	-	-	-
BLDC motor driver	Model	Peak Current(A)	Rated Current(A)	Voltage(A)	Matched Motor	N.W.(g)	Overall Dimensions(mm)	Detail page
	BLD-70	6	3	VDC12-30	≤70W	130	94×56.5×21	P25
	BLD-120	16	8	VDC12-30	≤125W	170	96×60×24.5	P27
	BLD-300B	35	15	VDC12-56	≤300W	340	143×80×33	P29
	BLD-750	45	25	VDC18-52	≤750W	600	151×97.5×52	P31
	BLDH-350	4	2	VAC180-265	≤350W	650	151×97.5×52	P33
	BLDH-750	8	4	VAC180-265	≤750W	850	170×97.5×65	P35

BLDC motor selection table

Model	Output Power(W)	Motor Voltage(VDC)	Rotational Speed(RPM)	Rated Torque(Nm)	Motor Length(mm)	N.W.(kg)	Matched Driver	Detail page
42BLF-0330NBB	30	24	3000	0.1	49	0.33	BLD-70/BLD-120A	P37
42BLF-0630NBB	62	24	3000	0.2	68	0.49	BLD-70/BLD-120A	P37
57BLY-0730NBB	69	24	3000	0.22	66.5	0.66	BLD-120A/BLD-300B	P37
57BLY-1030NBB	103	24	3000	0.33	87	0.89	BLD-120A/BLD-300B	P37
57BLY-1230NBB	125	24	3000	0.44	106.5	1.14	BLD-120A/BLD-300B	P37
57BLF-0615NBB	65	24	1500	0.4	82	0.95	BLD-120A/BLD-300B	P37
57BLF-0730NBB	65	24	3000	0.22	62	0.65	BLD-70/BLD-120A	P37
57BLF-1230NBB	125	24	3000	0.4	80	0.93	BLD-120A/BLD-300B	P37
57BLF-1830NBB	188	24	3000	0.6	101	1.28	BLD-300B/BLD-750	P37
57BLF-1230HBB	125	310	3000	0.32	80	0.93	BLDH-350	P37
57BLF-1830HBB	188	310	3000	0.64	101	1.28	BLDH-350	P37
60BLF-0815NBB	80	24	1500	0.5	100	1.27	BLD-300B/BLD-750	P38
60BLF-0830NBB	80	24	3000	0.25	78	0.86	BLD-300B/BLD-750	P38
60BLF-1630NBB	160	24	3000	0.5	100	1.22	BLD-300B/BLD-750	P38
60BLF-2430LBB	240	48	3000	0.75	120	1.66	BLD-300B/BLD-750	P38
70BLF-3230LBB	320	48	3000	1.0	120	2.01	BLD-750	P38
80BLF-7530LBB	750	48	3000	2.5	150	3.0	BLD-750	P38
80BLF-2515HBB	250	310	1500	1.6	145	2.6	BLDH-350	P38
80BLF-2530HBB	250	310	3000	0.8	132.5	2.2	BLDH-350	P38
80BLF-3530HBB	350	310	3000	1.1	132.5	2.2	BLDH-350	P38
80BLF-5030HBB	500	310	3000	1.6	145	2.6	BLDH-750	P38
80BLF-7530HBB	750	310	3000	2.5	150	3.0	BLDH-750	P38
86BLF-2230LBB	220	48	3000	0.7	82	1.77	BLD-300B	P39
86BLF-4430LBB	440	48	3000	1.4	112	2.83	BLD-750	P39
86BLF-2230HBB	220	310	3000	0.7	82	1.77	BLDH-350	P39
86BLF-3315HBB	330	310	1500	2.1	152	3.9	BLDH-350	P39
86BLF-3330HBB	330	310	3000	1.05	96	2.3	BLDH-350	P39
86BLF-4030HBB	400	310	3000	1.4	112	2.8	BLDH-750	P39
86BLF-5030HBB	500	310	3000	1.6	125	3.4	BLDH-750	P39
110BLF-6020HBB	630	310	2000	3.0	138	7.5	BLDH-750	P39
110BLF-12520HBB	1250	310	3000	6.0	198	9.2	BLDH-750	P39

BLDC geared motor selection table

Model	Output Power(W)	Motor Voltage(VDC)	Rotational Speed(RPM)	Rated Torque(Nm)	Gear Ratio	N.W.(kg)	Matched Driver	Detail page
57BLY-0730NBB-J	69	24	3000	0.2	1:05/1:7.5 1:10/1:15 1:20/1:30	1.2	BLD-120A/BLD-300B	P40
57BLY-1030NBB-J	103	24	3000	0.33		1.48	BLD-120A/BLD-300B	P40
86BLF-2230NBB-J	220	24	3000	0.7		3.16	BLD-300B	P40

Note: OEM is available according to customers' detail requirements.

Stepper motor selection table

Series	Model	Step Angel(°)	Holding Torque(Nm)	Current /phase(A)	Inductance (Mh)	Diameter of axle LB(mm)	Axial length LA(mm)	Motor Length L(mm)	N.W.(kg)	Matched Driver	Detail page
2 phase stepper motor	28H2P3205A4	1.8	0.06	0.45	6.9	3	12	32	0.1	MR2	P15
	28H2P4509A6	1.8	0.075	0.95	1.2	5	18	45	0.17	MR2	P15
	35H2P2803A4	1.8	0.11	0.3	1.6	5	19	28	0.13	MR2	P15
	35H2P2810A4	1.8	0.125	1.0	3.5	5	18	28	0.13	MR2	P15
	35H2P2810A6	1.8	0.075	1.0	1.0	5	18	28	0.13	MR2	P15
	39H2P2005A4	1.8	0.1	0.48	23	5	17.5	20	0.1	MR2	P15
	39H2P3105A6	1.8	0.1	0.5	4.0	5	22	31	0.16	MR2	P15
	42H2P3412A4	1.8	0.19	1.2	4.4	5	18	34	0.22	MR2	P16
	42H2P4010A4	1.8	0.35	1.0	9	5	18	40	0.29	MR2	P16
	42H2P4412A4	1.8	0.35	1.2	6	5	18	44	0.33	MR2	P16
	42H2P4812A4	1.8	0.45	1.2	6	5	18	48	0.36	MR2	P16
	42H2P4812A4-AB	1.8	0.38	1.2	3.4	5	15/15	48	0.36	MR2	P16
	42H2P4812A6	1.8	0.38	1.2	3.4	5	22	48	0.36	MR2	P16
	42H2P6017A4	1.8	0.75	1.7	6.7	5	18	60	0.47	MR2	P16
	57H2P4115A6	1.8	0.35	1.5	3.5	6.35	17	41	0.43	MR2/MR4	P16
	57H2P5130A4	1.8	0.9	3.0	2.9	6.35	19	51	0.57	MR4	P16
	57H2P5442A4	1.8	1.2	4.2	1.2	6.35	19	54	0.67	MR4/MR5	P16
	57H2P5442A4-A	1.8	1.2	4.2	1.4	8	20.4	54	0.67	MR4/MR5	P16
	57H2P5442A4-B	1.8	1.2	4.2	1.3	8	31	54	0.67	MR4/MR5	P16
	57H2P7842A4	1.8	2.1	4.2	1.8	6.35	20.4	78	1.06	MR4/MR5	P16
	57H2P7842A4-A	1.8	2.1	4.2	1.8	8	19.4	78	1.06	MR4/MR5	P16
	57H2P7842A4-B	1.8	2.1	4.2	1.8	8	31	78	1.06	MR4/MR5	P16
	57H2P8440A4	1.8	2.3	4.0	2.7	8	31	84	1.18	MR4/MR5	P16
	57H2P9850A4	1.8	2.6	4.5	2.4	8	32	98	1.45	MR4/MR5	P16
	60H2P6630A4	1.8	2.0	3.0	3.0	8	22	66	0.95	MR4/MR5	P17
	60H2P8642A4	1.8	2.7	4.2	2.5	8	26	86	1.34	MR4/MR5	P17
	85H2P6860A4	1.8	3.4	6.0	1.7	9.5	30	68	1.87	MR5/MR7	P17
	85H2P8060A4	1.8	4.5	6.0	3.2	12.7	30	80	2.3	MR5/MR7	P17
	85H2P9760A4	1.8	7.0	6.0	4.0	12.7	30	97	3.0	MR7A/MR7	P17
	85H2P11860A4	1.8	8.5	6.0	5.0	12.7/14	30	118	3.76	MR7A/MR7	P17
	85H2P15160A4	1.8	10	6.5	6.0	14	35	156	5.3	MR7A/MR7	P17
	110H2P1255A4	1.8	11.2	5.5	12	19	54	99	5.0	MC8H	P18
	110H2P2168A4	1.8	21	6.8	11	19	54	150	9.0	MC8H	P18
	110H2P3080A4	1.8	30	8.0	16	19	54	201	12	MC8H	P18
	130H2P5050A4	1.8	50	5.0	28	19	45	282	23.4	MC8H	P18
3 phase stepper motor	57H3P4124A3	1.2	0.4	2.4	4	6.35	19	41	0.43	3MR8	P19
	57H3P5656A3	1.2	0.9	5.6	1.1	6.35	19	56	0.69	3MR8	P19
	57H3P7652A3	1.2	1.2	5.2	1.4	8	19	76	1.02	3MR8	P19
	85H3P6858A3	1.2	2.0	5.8	1.5	12	29	68	1.86	3MR8	P19
	85H3P9758A3	1.2	3.2	5.8	2.5	12	29	97	2.9	3MR8	P19
	85H3P12558A3	1.2	6.0	5.8	6.1	14	29	125	4.1	3MR8	P19
	110H3P0843A3	1.2	8.0	4.3	17.1	19	36	136	5.7	3MC8H	P20
	110H3P1260A3	1.2	12	6.0	9.2	19	36	150	6.5	3MC8H	P20
	110H3P1665A3	1.2	16	6.5	8.9	19	36	181	8.7	3MC8H	P20
	110H3P2070A3	1.2	20	7.0	10.4	19	36	218	11.2	3MC8H	P20
	130H3P2068A3	1.2	20	6.8	7.8	24	48	168	10	3MC8H	P20
	130H3P2868A3	1.2	28	6.8	10.8	24	48	203	11	3MC8H	P20
	130H3P3568A3	1.2	35	6.8	14.2	24	48	238	12.3	3MC8H	P20
	130H3P5068A3	1.2	50	6.8	18.9	24	48	285	21.5	3MC8H	P20

Geared stepper motor selection table

Series	Model	Step Angel(°)	Holding Torque(Nm)	Current /phase(A)	Inductance (Mh)	Diameter of axle LB(mm)	Axial length LA(mm)	Motor Length L(mm)	N.W.(kg)	Gear Ratio	Matched Driver	Detail page
stepper motor with gear box	42H2P0712A4-G30	1.8	7	1.2	6	5	21	74	0.3	1:30	MR2	P21
	57H2P0930A8-G10	1.8	9	3.0	2.2	8	25	108	1.3	1:10	MR4/MR5	P21
	57H2P1830A8-G20	1.8	18	3.0	2.2	8	25	113	1.3	1:20	MR4/MR5	P21
	85H2P6045A4-G12.5	1.8	60	4.5	4.7	15	32	171	5.8	1:12.5	MR7/MR7A	P21
	85H2P8045A4-G20	1.8	80	4.5	4.7	15	32	171	5.8	1:20	MR7/MR7A	P21
	86H2P6842A4-G	1.8	3.2	5.0	3.0	12	27	69	3.12	1:5/1:10	MR7/MR7A	P22
	85H2P11860A4-G	1.8	6	6.0	2.0	12	27	118	5.02	1:20	MR7/MR7A	P22
stepper motor with planetary reducer	42H2P3412A4-PG05	1.8	0.9	1.2	4.4	8	19.5	76	0.45	1:05	MR2	P23
	42H2P3412A4-PG10	1.8	1.8	1.2	4.4	8	19.5	76	0.45	1:10	MR2	P23
	42H2P3412A4-PG20	1.8	3.5	1.2	4.4	8	19.5	86	0.52	1:20	MR2	P23
	42H2P4812A4-PG05	1.8	2.0	1.2	6	8	19.5	90	0.59	1:05	MR2	P23
	42H2P4812A4-PG10	1.8	4.0	1.2	6	8	19.5	90	0.59	1:10	MR2	P23
	42H2P4812A4-PG20	1.8	8.0	1.2	6	8	19.5	100	0.65	1:20	MR2	P23
	57H2P5442A4-PG05	1.8	5	4.2	1.3	14	32	107	1.4	1:05	MR4/MR5	P23
	57H2P5442A4-PG10	1.8	10	4.2	1.3	14	32	107	1.4	1:10	MR4/MR5	P23
	57H2P5442A4-PG20	1.8	20	4.2	1.3	14	32	124	1.65	1:20	MR4/MR5	P23
	57H2P7842A4-PG05	1.8	9	4.2	1.9	14	32	131	1.76	1:05	MR4/MR5	P23
	57H2P7842A4-PG10	1.8	18	4.2	1.9	14	32	131	1.76	1:10	MR4/MR5	P23
	57H2P7842A4-PG20	1.8	36	4.2	1.9	14	32	148	2.04	1:20	MR4/MR5	P23

Note: OEM is available according to customers' detail requirements.

Reliable stepper motor system

- Advanced current control
- Microstep Emulation
- Anti-Resonance
- Self Test

Stepper driver specialty

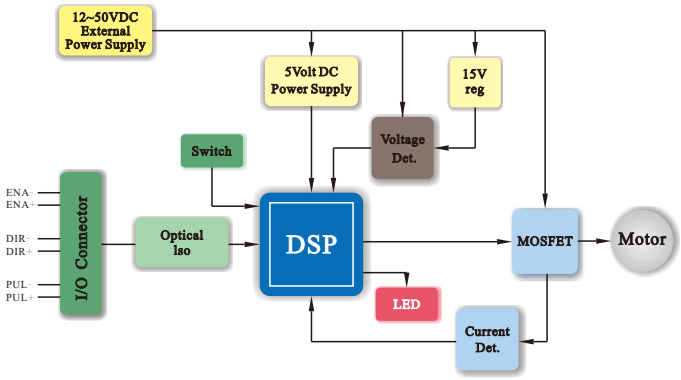

Advanced current control

MR series digital stepper motor driver is high cost-effective motor driver with resolution based on ARM chip. It has feature advanced micro stepping performance, as well as high speed with high torque output, low noise low vibration and low temperature rise. Besides, it has abundant chip resource, which is good for customers' development and design.

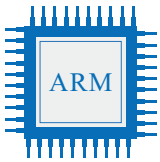

Anti-Resonance/Electronic Damping

Step motor systems have a natural tendency to resonate at certain speeds. MR series Stepper Drive automatically calculates the system's natural frequency and applies damping to the control algorithm.
This greatly improves midrange stability, allows for higher speeds, greater torque utilization.

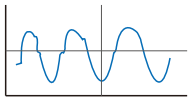

Microstep Emulation

With Microstep Emulation, low resolution systems can still provide smooth motion. The drive can take low-resolution step pulses and create fine resolution micro-step motion.

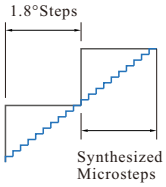

Multiple motor parameter selection

To optimize the system performance to gain fastest feedback, customers are allowed to select parameters (4 or 16 choices) to match the motor size, motor inductance.

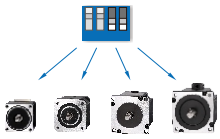

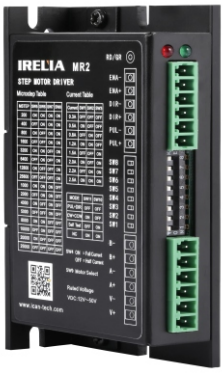

MR2
Digital stepper motor driver

Electrical parameters

Parameters	Min Value	Typical Value	Max Value	Unit
Input Voltage	12	24	50	VDC
Output Current	0.3	–	2.5	A
Input Signal Voltage	3.3	5	24	VDC
Input Pulse Frequency	–	–	200K	Hz
Input Pulse Width	250	–	5E+ 8	ns

Current setting

Peak current	SW1	SW2	SW3
0.3A	OFF	OFF	OFF
0.5A	ON	OFF	OFF
0.8A	OFF	ON	OFF
1.2A	ON	ON	OFF
1.5A	OFF	OFF	ON
2.0A	ON	OFF	ON
2.2A	OFF	ON	ON
2.5A	ON	ON	ON

SW4 =OFF half current lock, SW4=ON full current lock.

Subdivision settings

Subdivision (Step/r)	SW5	SW6	SW7	SW8
200	ON	ON	ON	ON
400	OFF	ON	ON	ON
800	ON	OFF	ON	ON
1600	OFF	OFF	ON	ON
3200	ON	ON	OFF	ON
6400	OFF	ON	OFF	ON
12800	ON	OFF	OFF	ON
25600	OFF	OFF	OFF	ON
1000	ON	ON	ON	OFF
2000	OFF	ON	ON	OFF
4000	ON	OFF	ON	OFF
5000	OFF	OFF	ON	OFF
8000	ON	ON	OFF	OFF
10000	OFF	ON	OFF	OFF
20000	ON	OFF	OFF	OFF
25000	OFF	OFF	OFF	OFF

Function settings

Single/double pulse modes selection

CW/CCW mode: SW9=ON
PUL/DIR mode: SW9=OFF (factory setting)

Driver self test

When self test function is set up, driver itself detects whether the internal components work well and outer signal connection.
Self test open: SW10=ON,Self test closed: SW10=OFF

Motor parameter selection and matching

To optimize the system to gain the best performance customers are advised to select suitable parameters (4 choices based on SW11 and SW12) to match the motor size, motor inductance.
For motor which is high torque and high inductance, customers are advised to set SW11=OFF, SW12=OFF (factory setting)
For motor which is low torque and low inductance, customers are advised to set SW11=ON, SW12=ON

Machine dimension

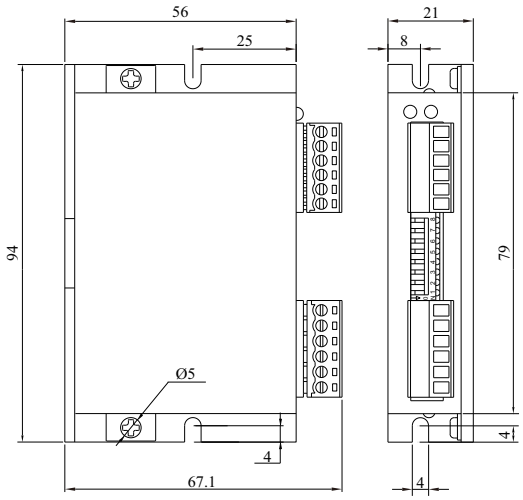

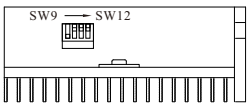

Unit(mm)

Driver interface and wiring diagram

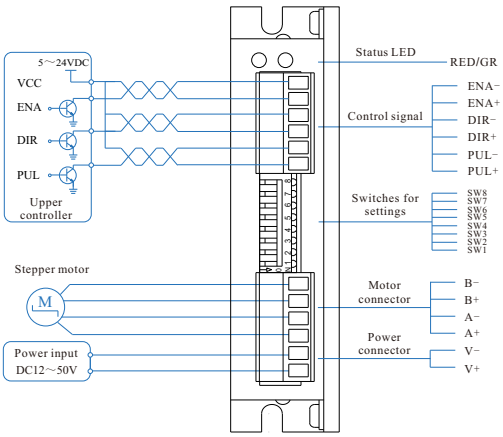

MR4
Digital stepper motor driver

Electrical parameters

Parameters	Min Value	Typical Value	Max Value	Unit
Input Voltage	20	48	50	VDC
Output Current	1.0	–	4.2	A
Input Signal Voltage	3.3	5	24	VDC
Input Pulse Frequency	–	–	200K	Hz
Input Pulse Width	250	–	5E+ 8	ns

Current setting

Peak current	SW1	SW2	SW3
1.0A	ON	ON	ON
1.5A	OFF	ON	ON
1.9A	ON	OFF	ON
2.4A	OFF	OFF	ON
2.8A	ON	ON	OFF
3.3A	OFF	ON	OFF
3.8A	ON	OFF	OFF
4.2A	OFF	OFF	OFF

SW4 =OFF half current lock, SW4=ON full current lock.

Subdivision settings

Subdivision (Step/r)	SW5	SW6	SW7	SW8
400	OFF	ON	ON	ON
800	ON	OFF	ON	ON
1600	OFF	OFF	ON	ON
3200	ON	ON	OFF	ON
6400	OFF	ON	OFF	ON
12800	ON	OFF	OFF	ON
25600	OFF	OFF	OFF	ON
1000	ON	ON	ON	OFF
2000	OFF	ON	ON	OFF
4000	ON	OFF	ON	OFF
5000	OFF	OFF	ON	OFF
8000	ON	ON	OFF	OFF
10000	OFF	ON	OFF	OFF
20000	ON	OFF	OFF	OFF
25000	OFF	OFF	OFF	OFF

Function settings

Single/double pulse modes selection

CW/CCW mode: SW9=ON
PUL/DIR mode: SW9=OFF (factory setting)

Driver self test

When self test function is set up, driver itself detects whether the internal components work well and outer signal connection.
Self test open: SW10=ON,Self test closed: SW10=OFF

Motor parameter selection and matching

To optimize the system to gain the best performance customers are advised to select suitable parameters (4 choices based on SW11 and SW12) to match the motor size, motor inductance.
For motor which is high torque and high inductance, customers are advised to set SW11=OFF, SW12=OFF (factory setting)
For motor which is low torque and low inductance, customers are advised to set SW11=ON, SW12=ON

Machine dimension

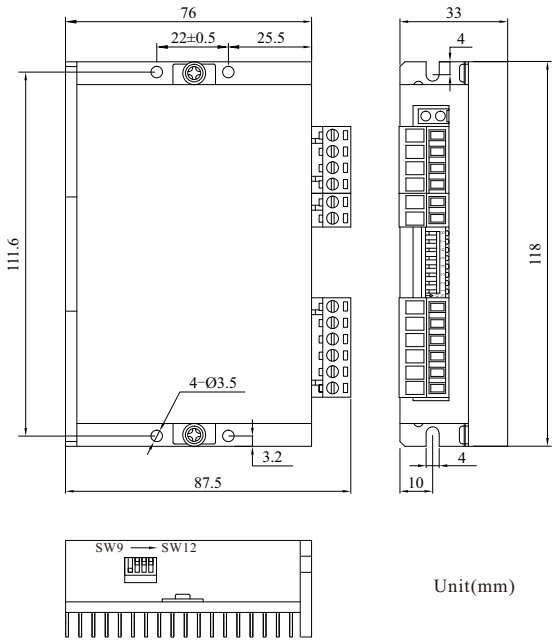

Unit(mm)

Driver interface and wiring diagram

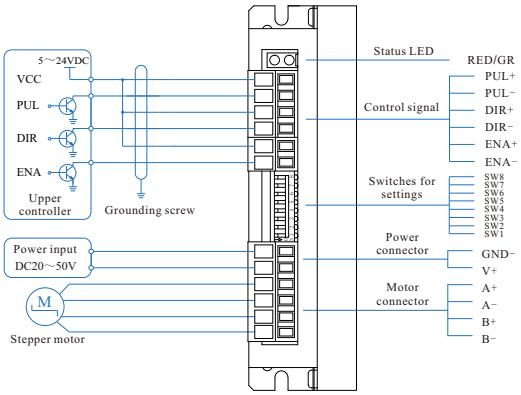

Driver

MR5
Digital stepper motor driver

Electrical parameters

Parameters	Min Value	Typical Value	Max Value	Unit
Input Voltage	20	48	75	VDC
Output Current	2.0	–	5.6	A
Input Signal Voltage	3.3	5	24	VDC
Input Pulse Frequency	–	–	200K	Hz
Input Pulse Width	250	–	5E+ 8	ns

Current setting

Peak current	SW1	SW2	SW3
2.0A	OFF	OFF	OFF
2.7A	ON	OFF	OFF
3.2A	OFF	ON	OFF
3.8A	ON	ON	OFF
4.1A	OFF	OFF	ON
4.5A	ON	OFF	ON
4.9A	OFF	ON	ON
5.6A	ON	ON	ON

SW4 =OFF half current lock, SW4=ON full current lock.

Subdivision settings

Subdivision (Step/r)	SW5	SW6	SW7	SW8
200	ON	ON	ON	ON
400	OFF	ON	ON	ON
800	ON	OFF	ON	ON
1600	OFF	OFF	ON	ON
3200	ON	ON	OFF	ON
6400	OFF	ON	OFF	ON
12800	ON	OFF	OFF	ON
25600	OFF	OFF	OFF	ON
1000	ON	ON	ON	OFF
2000	OFF	ON	ON	OFF
4000	ON	OFF	ON	OFF
5000	OFF	OFF	ON	OFF
8000	ON	ON	OFF	OFF
10000	OFF	ON	OFF	OFF
20000	ON	OFF	OFF	OFF
25000	OFF	OFF	OFF	OFF

Function settings

Single/double pulse modes selection

CW/CCW mode: SW9=ON
PUL/DIR mode: SW9=OFF (factory setting)

Driver self test

When self test function is set up, driver itself detects whether the internal components work well and outer signal connection.
Self test open: SW10=ON,Self test closed: SW10=OFF

Motor parameter selection and matching

To optimize the system to gain the best performance customers are advised to select suitable parameters (4 choices based on SW11 and SW12) to match the motor size, motor inductance.
For motor which is high torque and high inductance, customers are advised to set SW11=OFF, SW12=OFF (factory setting)
For motor which is low torque and low inductance, customers are advised to set SW11=ON, SW12=ON

Machine dimension

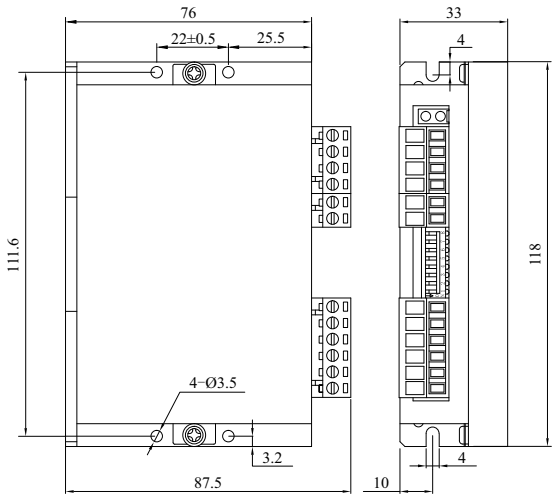

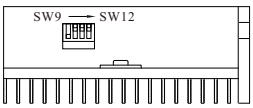

Unit(mm)

Driver interface and wiring diagram

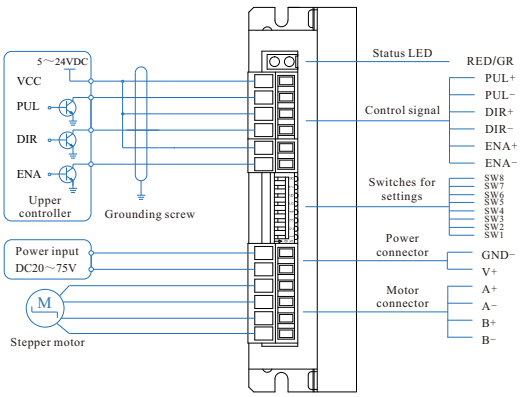

Driver

MR7
Digital stepper motor driver

Electrical parameters

Parameters	Min Value	Typical Value	Max Value	Unit
Input Voltage	18	50	60	VAC
Output Current	2.4	–	7.2	A
Input Signal Voltage	3.3	5	24	VDC
Input Pulse Frequency	–	–	200K	Hz
Input Pulse Width	250	–	5E+ 8	ns

Current setting

Peak current	SW1	SW2	SW3
2.4A	OFF	OFF	OFF
3.1A	ON	OFF	OFF
3.8A	OFF	ON	OFF
4.5A	ON	ON	OFF
5.1A	OFF	OFF	ON
5.8A	ON	OFF	ON
6.4A	OFF	ON	ON
7.2A	ON	ON	ON

SW4 =OFF half current lock, SW4=ON full current lock.

Subdivision settings

Subdivision (Step/r)	SW5	SW6	SW7	SW8
200	ON	ON	ON	ON
400	OFF	ON	ON	ON
800	ON	OFF	ON	ON
1600	OFF	OFF	ON	ON
3200	ON	ON	OFF	ON
6400	OFF	ON	OFF	ON
12800	ON	OFF	OFF	ON
25600	OFF	OFF	OFF	ON
1000	ON	ON	ON	OFF
2000	OFF	ON	ON	OFF
4000	ON	OFF	ON	OFF
5000	OFF	OFF	ON	OFF
8000	ON	ON	OFF	OFF
10000	OFF	ON	OFF	OFF
20000	ON	OFF	OFF	OFF
25000	OFF	OFF	OFF	OFF

Function settings

Single/double pulse modes selection

CW/CCW mode: SW9=ON
PUL/DIR mode: SW9=OFF (factory setting)

Driver self test

When self test function is set up, driver itself detects whether the internal components work well and outer signal connection.
Self test open: SW10=ON,Self test closed: SW10=OFF

Motor parameter selection and matching

To optimize the system to gain the best performance customers are advised to select suitable parameters (4 choices based on SW11 and SW12) to match the motor size, motor inductance.
For motor which is high torque and high inductance, customers are advised to set SW11=OFF, SW12=OFF (factory setting)
For motor which is low torque and low inductance, customers are advised to set SW11=ON, SW12=ON

Machine dimension

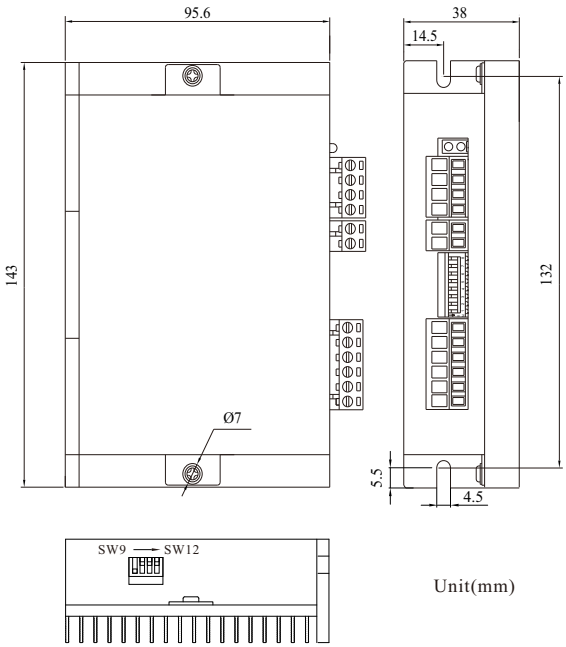

Unit(mm)

Driver interface and wiring diagram

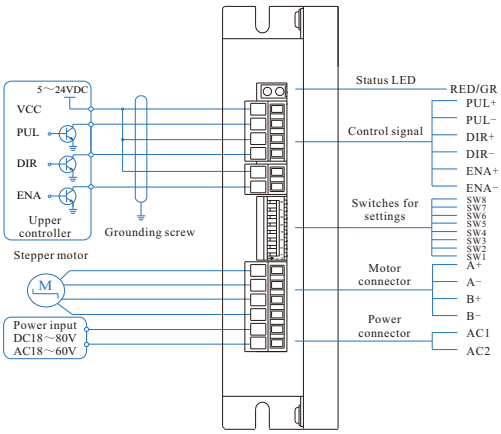

Driver

MR7A
Digital stepper motor driver

Electrical parameters

Parameters	Min Value	Typical Value	Max Value	Unit
Input Voltage	18	70	80	VAC
Output Current	2.4	–	7.2	A
Input Signal Voltage	3.3	5	24	VDC
Input Pulse Frequency	–	–	200K	Hz
Input Pulse Width	250	–	5E+ 8	ns

Current setting

Peak current	SW1	SW2	SW3
2.4A	OFF	OFF	OFF
3.1A	ON	OFF	OFF
3.8A	OFF	ON	OFF
4.5A	ON	ON	OFF
5.1A	OFF	OFF	ON
5.8A	ON	OFF	ON
6.4A	OFF	ON	ON
7.2A	ON	ON	ON

SW4 =OFF half current lock, SW4=ON full current lock.

Subdivision settings

Subdivision (Step/r)	SW5	SW6	SW7	SW8
200	ON	ON	ON	ON
400	OFF	ON	ON	ON
800	ON	OFF	ON	ON
1600	OFF	OFF	ON	ON
3200	ON	ON	OFF	ON
6400	OFF	ON	OFF	ON
12800	ON	OFF	OFF	ON
25600	OFF	OFF	OFF	ON
1000	ON	ON	ON	OFF
2000	OFF	ON	ON	OFF
4000	ON	OFF	ON	OFF
5000	OFF	OFF	ON	OFF
8000	ON	ON	OFF	OFF
10000	OFF	ON	OFF	OFF
20000	ON	OFF	OFF	OFF
25000	OFF	OFF	OFF	OFF

Function settings

Single/double pulse modes selection

CW/CCW mode: SW9=ON
PUL/DIR mode: SW9=OFF (factory setting)

Driver self test

When self test function is set up, driver itself detects whether the internal components work well and outer signal connection.
Self test open: SW10=ON,Self test closed: SW10=OFF

Motor parameter selection and matching

To optimize the system to gain the best performance customers are advised to select suitable parameters (4 choices based on SW11 and SW12) to match the motor size, motor inductance.
For motor which is high torque and high inductance, customers are advised to set SW11=OFF, SW12=OFF (factory setting)
For motor which is low torque and low inductance, customers are advised to set SW11=ON, SW12=ON

Machine dimension

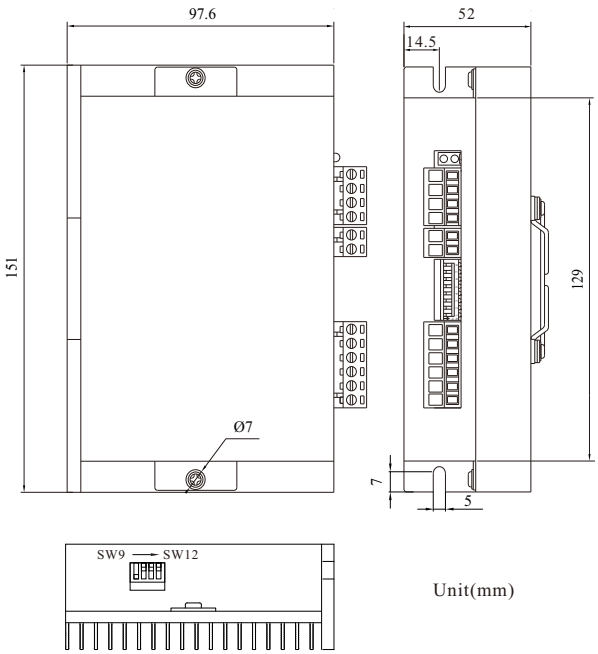

Driver interface and wiring diagram

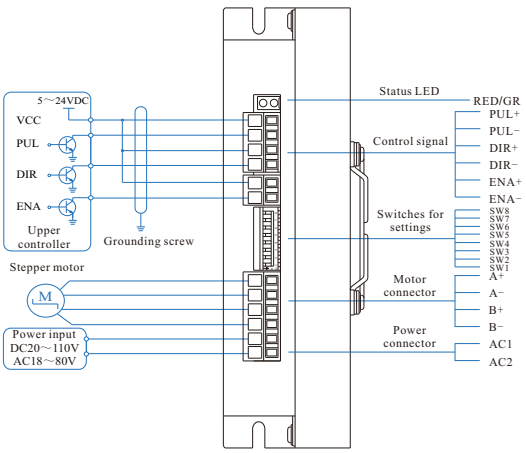

Driver

MC8H
Digital stepper motor driver

Electrical parameters

Parameters	Min Value	Typical Value	Max Value	Unit
Input Voltage	85	220	265	VAC
Output Current	0.5	–	8.0	A
Input Signal Voltage	3.3	5	24	VDC
Input Pulse Frequency	1	–	1M	Hz
Input Pulse Width	250	–	5E+ 8	ns

Current setting

Switches	0	1	2	3	4	5
Current	0.5A	1.0A	1.5A	2.0A	2.5A	3.0A
Switches	6	7	8	9	A	B
Current	3.5A	4.0A	4.5A	5.0A	5.5A	6.0A
Switches	C	D	E	F		
Current	6.5A	7.0A	7.5A	8.0A		

SW6 =OFF half current lock, SW6=ON full current lock.

Subdivision settings

Switches	0	1	2	3	4	5
Subdivision	200	400	800	1600	3200	6400
Switches	6	7	8	9	A	B
Subdivision	12800	25600	1000	2000	4000	5000
Switches	C	D	E	F		
Subdivision	8000	10000	20000	25000		

Function settings

Driver self test

When self test function is set up, driver itself detects whether the internal components work well and outer signal connection.
Self test open: SW4=ON,Self test closed: SW4=OFF

Single/double pulse modes selection

CW/CCW mode: SW5=ON
PUL/DIR mode: SW5=OFF (factory setting)

Motor selection settings

Switches	0	1	2	3	4	5
Matched motor	57	57	60	60	86	86
Switches	6	7	8	9	A	B
Matched motor	86	86	110	110	110	110
Switches	C	D	E	F		
Matched motor	130	130	130	130		

Driver interface and wiring diagram

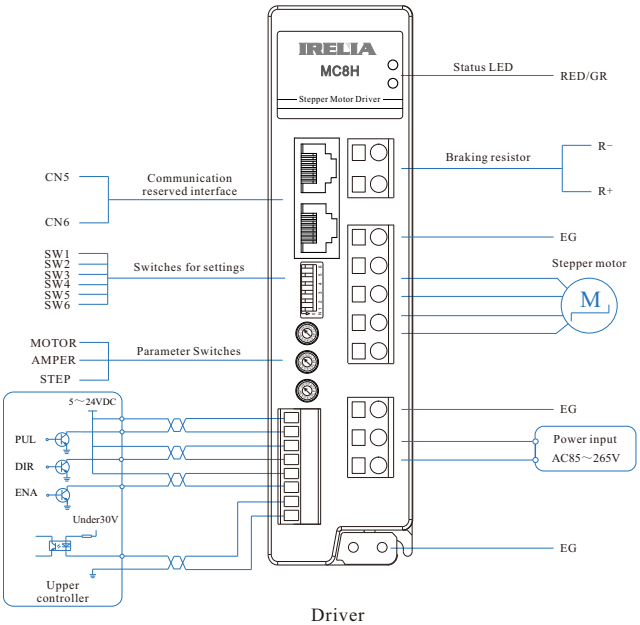

Driver

Machine dimension

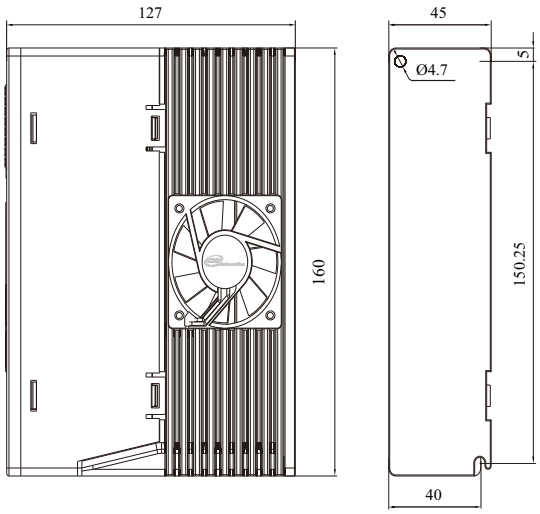

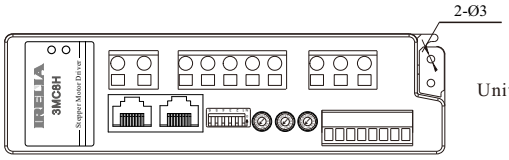

Unit(mm)

3MR8
Digital stepper motor driver

Electrical parameters

Parameters	Min Value	Typical Value	Max Value	Unit
Input Voltage	24	48	75	VDC
Output Current	1.5	–	7.8	A
Input Signal Voltage	3.3	5	24	VDC
Input Pulse Frequency	–	–	200K	Hz
Input Pulse Width	250	–	5E+ 8	ns

Current setting

Peak current	SW1	SW2	SW3
1.5A	OFF	OFF	OFF
2.0A	ON	OFF	OFF
3.0A	OFF	ON	OFF
4.0A	ON	ON	OFF
5.2A	OFF	OFF	ON
5.8A	ON	OFF	ON
7.0A	OFF	ON	ON
7.8A	ON	ON	ON

SW4 =OFF half current lock, SW4=ON full current lock.

Subdivision settings

Subdivision (Step/r)	SW5	SW6	SW7	SW8
200	ON	ON	ON	ON
400	OFF	ON	ON	ON
800	ON	OFF	ON	ON
1600	OFF	OFF	ON	ON
3200	ON	ON	OFF	ON
6400	OFF	ON	OFF	ON
12800	ON	OFF	OFF	ON
25600	OFF	OFF	OFF	ON
1000	ON	ON	ON	OFF
2000	OFF	ON	ON	OFF
4000	ON	OFF	ON	OFF
5000	OFF	OFF	ON	OFF
8000	ON	ON	OFF	OFF
10000	OFF	ON	OFF	OFF
20000	ON	OFF	OFF	OFF
25000	OFF	OFF	OFF	OFF

Function settings

Single/double pulse modes selection

CW/CCW mode: SW12=ON
PUL/DIR mode: SW12=OFF (factory setting)

Driver self test

When self test function is set up, driver itself detects whether the internal components work well and outer signal connection.
Self test open: SW13=ON,Self test closed: SW13=OFF

Motor parameter selection and matching

To optimize the system performance to gain fastest feedback, customers are allowed to select parameters (7 choices based on SW9 SW10 and SW11) to match the motor size, motor inductance. Go to instruction book for the corresponding parameters tab.

Machine dimension

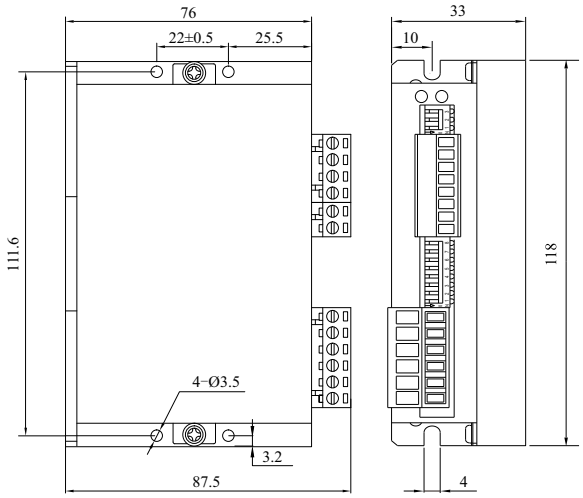

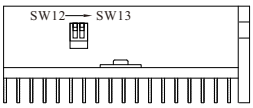

Unit(mm)

Driver interface and wiring diagram

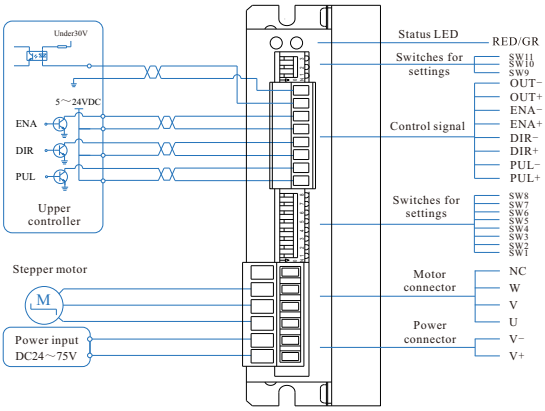

Driver

3MC8H
Digital stepper motor driver

Electrical parameters

Parameters	Min Value	Typical Value	Max Value	Unit
Input Voltage	85	220	265	VAC
Output Current	0.5	–	8.0	A
Input Signal Voltage	3.6	5	24	VDC
Input Pulse Frequency	1	–	1M	Hz
Input Pulse Width	250	–	5E+ 8	ns

Current setting

Switches	0	1	2	3	4	5
Current	0.5A	1.0A	1.5A	2.0A	2.5A	3.0A
Switches	6	7	8	9	A	B
Current	3.5A	4.0A	4.5A	5.0A	5.5A	6.0A
Switches	C	D	E	F		
Current	6.5A	7.0A	7.5A	8.0A		

SW6 =OFF half current lock, SW6=ON full current lock.

Subdivision settings

Switches	0	1	2	3	4	5
Subdivision	200	400	800	1600	3200	6400
Switches	6	7	8	9	A	B
Subdivision	12800	25600	1000	2000	4000	5000
Switches	C	D	E	F		
Subdivision	8000	10000	20000	25000		

Function settings

Driver self test

When self test function is set up, driver itself detects whether the internal components work well and outer signal connection.
Self test open: SW4=ON,Self test closed: SW4=OFF

Single/double pulse modes selection

CW/CCW mode: SW5=ON
PUL/DIR mode: SW5=OFF (factory setting)

Motor selection settings

Switches	0	1	2	3	4	5
Matched motor	57	57	60	60	86	86
Switches	6	7	8	9	A	B
Matched motor	86	86	110	110	110	110
Switches	C	D	E	F		
Matched motor	130	130	130	130		

Driver interface and wiring diagram

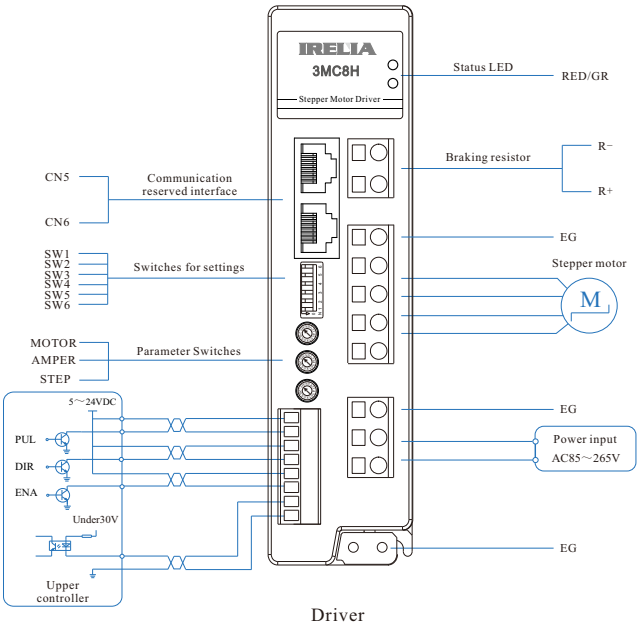

Driver

Machine dimension

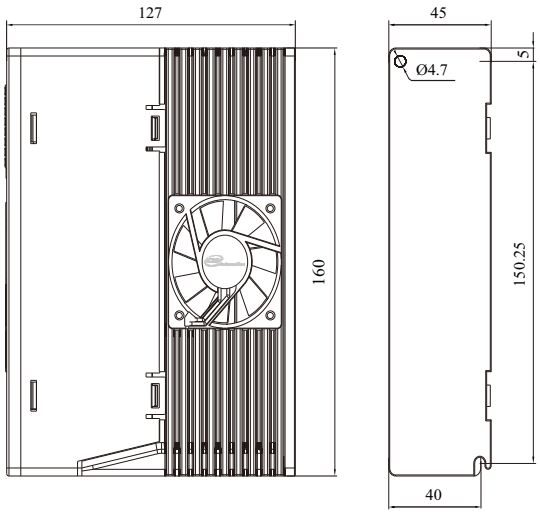

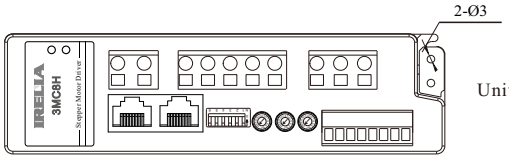

Unit(mm)

2 phase nema 11 stepper motor

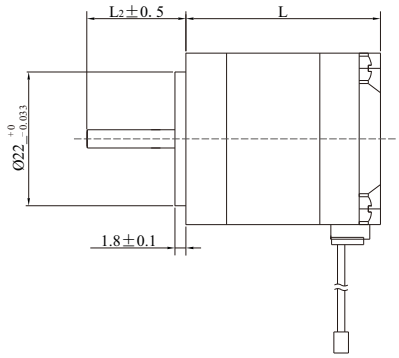

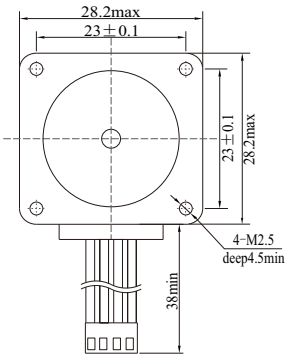

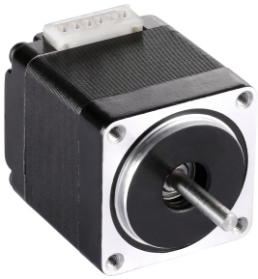

Unit:mm

Model	Step Angel(°)	Holding Torque(Nm)	Current /phase(A)	Resistance (Ω)	Inductance (Mh)	Diameter of axle LB(mm)	Axial length LA(mm)	Length L(mm)	N.W.(kg)	Matched Driver
28H2P3205A4	1.8	0.06	0.45	11	6.9	3	12	32	0.1	MR2
28H2P4509A6	1.8	0.075	0.95	3.4	1.2	5	18	45	0.17	MR2

2 phase nema 14 stepper motor

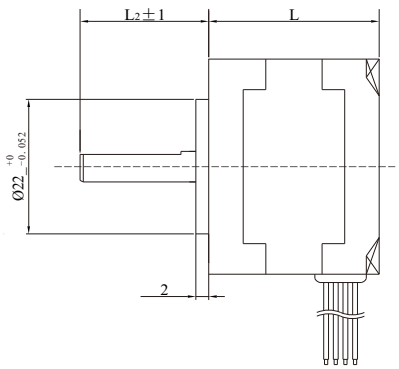

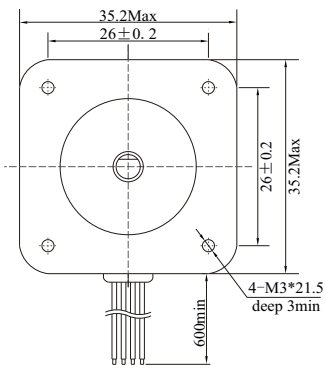

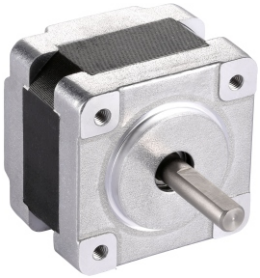

Unit:mm

Model	Step Angel(°)	Holding Torque(Nm)	Current /phase(A)	Resistance (Ω)	Inductance (Mh)	Diameter of axle LB(mm)	Axial length LA(mm)	Length L(mm)	N.W.(kg)	Matched Driver
35H2P2803A4	1.8	0.11	0.3	40	1.6	5	19	28	0.13	MR2
35H2P2810A4	1.8	0.125	1.0	3.5	3.5	5	18	28	0.13	MR2
35H2P2810A6	1.8	0.075	1.0	2.7	1.0	5	18	28	0.13	MR2

2 phase nema 16 stepper motor

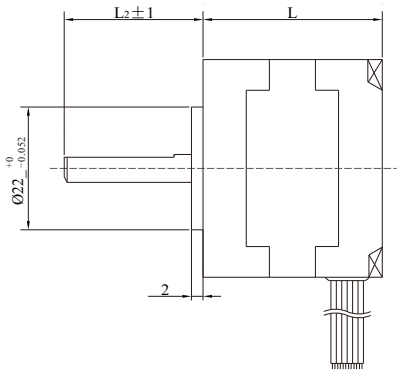

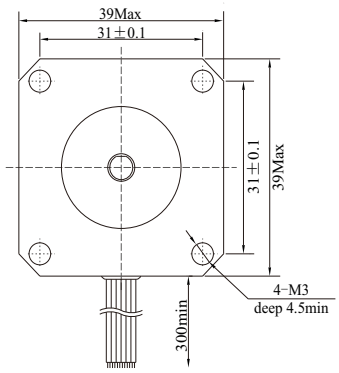

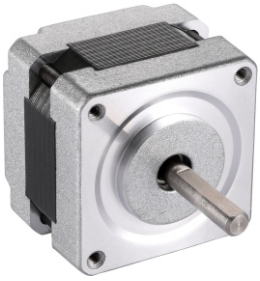

Unit:mm

Model	Step Angel(°)	Holding Torque(Nm)	Current /phase(A)	Resistance (Ω)	Inductance (Mh)	Diameter of axle LB(mm)	Axial length LA(mm)	Length L(mm)	N.W.(kg)	Matched Driver
39H2P2005A4	1.8	0.1	0.48	25	23	5	17.5	20	0.1	MR2
39H2P3105A6	1.8	0.1	0.5	9	4	5	22	31	0.16	MR2

2 phase nema 17 stepper motor

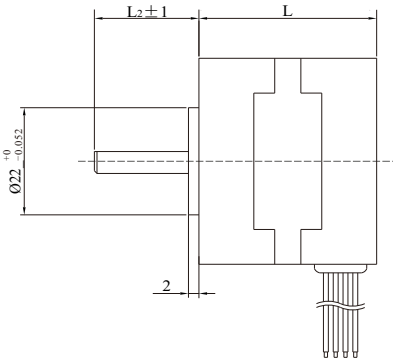

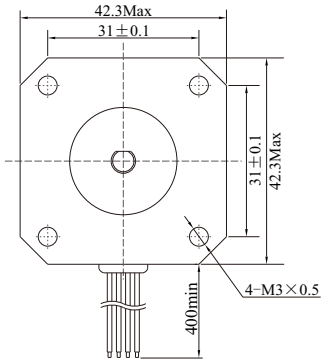

Unit:mm

Model	Step Angel(°)	Holding Torque(Nm)	Current /phase(A)	Resistance (Ω)	Inductance (Mh)	Diameter of axle LB(mm)	Axial length LA(mm)	Length L(mm)	N.W.(kg)	Matched Driver
42H2P3412A4	1.8	0.19	1.2	3.2	4.4	5	18	34	0.22	MR2
42H2P4010A4	1.8	0.35	1.0	5.7	9	5	18	40	0.29	MR2
42H2P4412A4	1.8	0.35	1.2	2.7	6	5	18	44	0.33	MR2
42H2P4812A4	1.8	0.45	1.2	3.2	6	5	18	48	0.36	MR2
42H2P4812A4-AB	1.8	0.38	1.2	3.8	3.4	5	15/15	48	0.36	MR2
42H2P4812A6	1.8	0.38	1.2	3.8	3.4	5	22	48	0.36	MR2
42H2P6017A4	1.8	0.75	1.7	2.5	6.7	5	18	60	0.47	MR2

2 phase nema 23 stepper motor

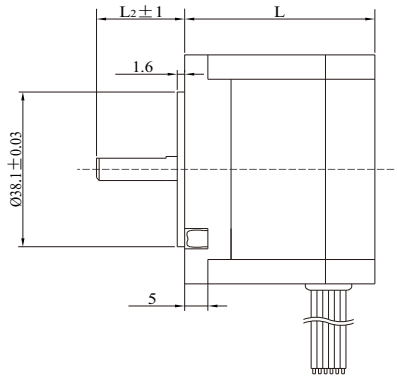

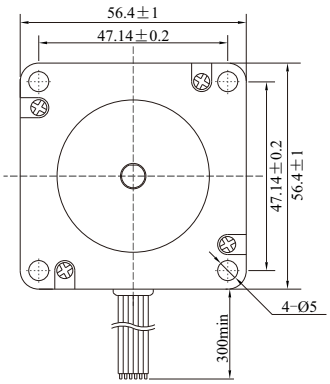

Unit:mm

Model	Step Angel(°)	Holding Torque(Nm)	Current /phase(A)	Resistance (Ω)	Inductance (Mh)	Diameter of axle LB(mm)	Axial length LA(mm)	Length L(mm)	N.W.(kg)	Matched Driver
57H2P4115A6	1.8	0.35	1.5	1.8	3.5	6.35	17	41	0.43	MR2/MR4
57H2P5130A4	1.8	0.9	3.0	0.8	2.9	6.35	19	51	0.57	MR4
57H2P5442A4	1.8	1.2	4.2	0.4	1.2	6.35	19	54	0.67	MR4/MR5
57H2P5442A4-A	1.8	1.2	4.2	0.4	1.4	8	20.4	54	0.67	MR4/MR5
57H2P5442A4-B	1.8	1.2	4.2	0.38	1.3	8	31	54	0.67	MR4/MR5
57H2P7842A4	1.8	2.1	4.2	0.55	1.9	6.35	20.4	78	1.06	MR4/MR5
57H2P7842A4-A	1.8	2.1	4.2	0.55	1.9	8	19.4	78	1.06	MR4/MR5
57H2P7842A4-B	1.8	2.1	4.2	0.55	1.9	8	31	78	1.06	MR4/MR5
57H2P8440A4	1.8	2.3	4.0	0.9	2.7	8	31	84	1.18	MR4/MR5
57H2P9850A4	1.8	2.6	4.5	0.7	2.4	8	32	98	1.45	MR4/MR5

2 phase nema 24 stepper motor

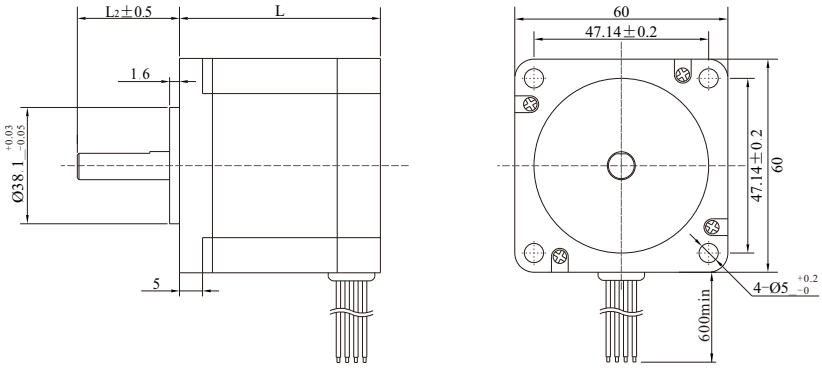

Unit:mm

Model	Step Angel(°)	Holding Torque(Nm)	Current /phase(A)	Resistance (Ω)	Inductance (Mh)	Diameter of axle LB(mm)	Axial length LA(mm)	Length L(mm)	N.W.(kg)	Matched Driver
60H2P6630A4	1.8	2.0	3.0	1.2	3.0	8	22	66	0.95	MR4/MR5
60H2P8642A4	1.8	2.7	4.2	0.65	2.5	8	26	86	1.34	MR4/MR5

2 phase nema 34 stepper motor

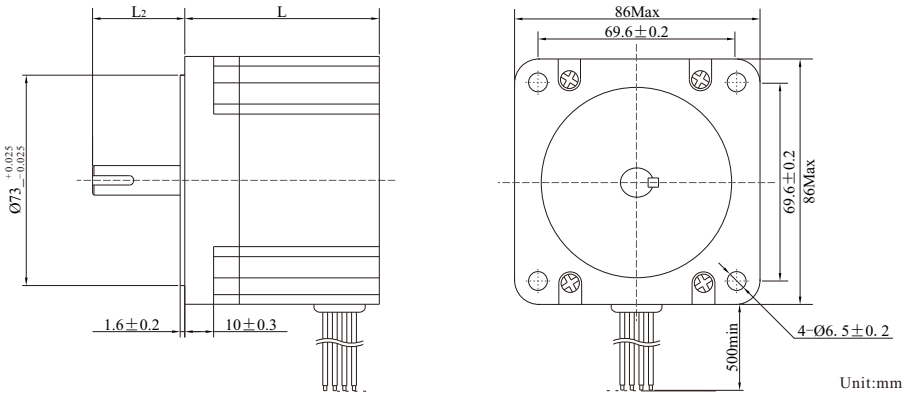

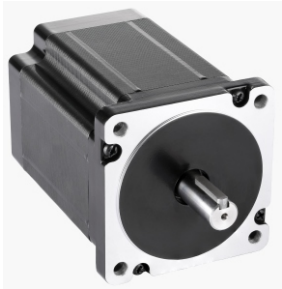

Unit:mm

Model	Step Angel(°)	Holding Torque(Nm)	Current /phase(A)	Resistance (Ω)	Inductance (Mh)	Diameter of axle LB(mm)	Axial length LA(mm)	Length L(mm)	N.W.(kg)	Matched Driver
85H2P6860A4	1.8	3.4	6.0	0. 35	1.7	9.5	30	68	1.87	MR5/MR7
85H2P8060A4	1.8	4.5	6.0	0.35	3.2	12.7	30	80	2.3	MR5/MR7
85H2P9760A4	1.8	7.0	6.0	0.5	4	12.7	30	97	3.0	MR7A/MR7
85H2P11860A4	1.8	8.5	6.0	0.62	6.3	12.7/14	30	118	3.76	MR7A/MR7
85H2P15160A4	1.8	10	6.5	0.55	6	14	35	156	5.3	MR7A/MR7

2 phase nema 42 stepper motor

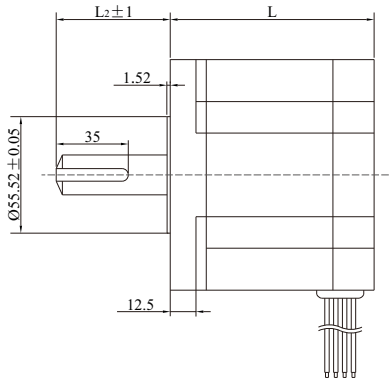

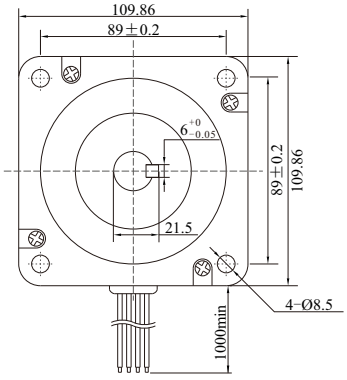

Unit:mm

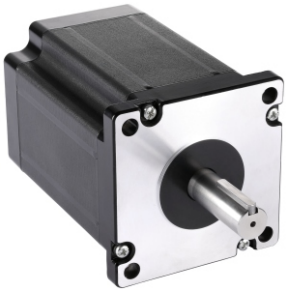

Model	Step Angel(°)	Holding Torque(Nm)	Current /phase(A)	Resistance (Ω)	Inductance (Mh)	Diameter of axle LB(mm)	Axial length LA(mm)	Length L(mm)	N.W.(kg)	Matched Driver
110H2P1255A4	1.8	11.2	5.5	0.9	12	19	54	99	5.0	MC8H
110H2P2168A4	1.8	21	6.8	0.8	11	19	54	150	9.0	MC8H
110H2P3080A4	1.8	30	8.0	0.67	16	19	54	201	12	MC8H

2 phase nema 51 stepper motor

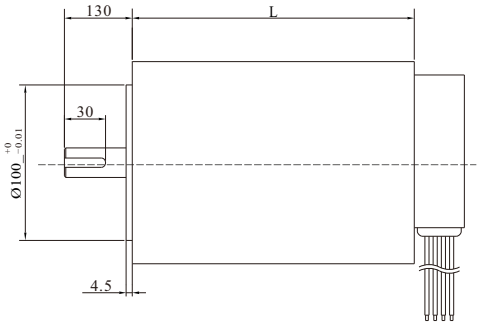

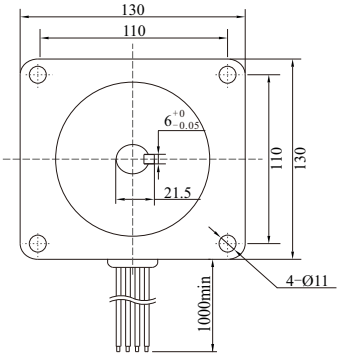

Unit:mm

Model	Step Angel(°)	Holding Torque(Nm)	Current /phase(A)	Resistance (Ω)	Inductance (Mh)	Diameter of axle LB(mm)	Axial length LA(mm)	Length L(mm)	N.W.(kg)	Matched Driver
130H2P5050A4	1.8	50	5.0	1. 58	28	19	45	282	23. 4	MC8H

3 phase nema 23 stepper motor

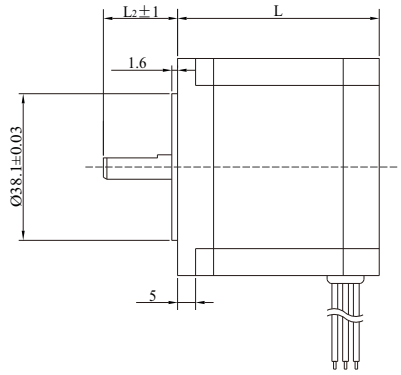

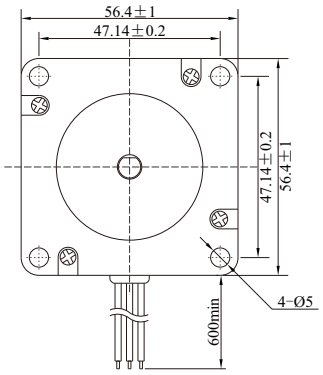

Unit:mm

Model	Step Angel(°)	Holding Torque(Nm)	Current /phase(A)	Resistance (Ω)	Inductance (Mh)	Diameter of axle LB(mm)	Axial length LA(mm)	Length L(mm)	N.W.(kg)	Matched Driver
57H3P4124A3	1.2	0.4	2.4	3.4	4	6.35	19	41	0.43	3MR8
57H3P5656A3	1.2	0.9	5.6	0.5	1.1	6.35	19	56	0.69	3MR8
57H3P7652A3	1.2	1.2	5.2	0.5	1.4	8	19	76	1.02	3MR8

3 phase nema 34 stepper motor

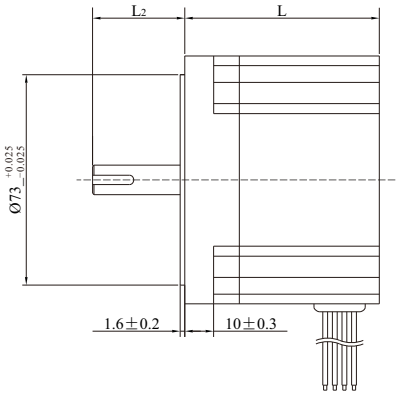

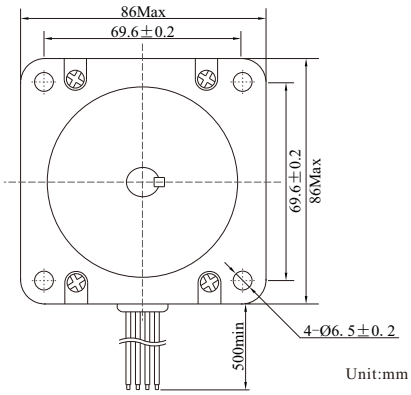

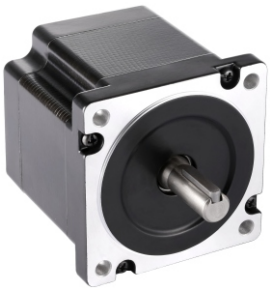

Unit:mm

Model	Step Angel(°)	Holding Torque(Nm)	Current /phase(A)	Resistance (Ω)	Inductance (Mh)	Diameter of axle LB(mm)	Axial length LA(mm)	Length L(mm)	N.W.(kg)	Matched Driver
85H3P6858A3	1.2	2.0	5.8	0.52	1.5	12	29	68	1.86	3MR8
85H3P9758A3	1.2	3.2	5.8	0.53	2.5	12	29	97	2.9	3MR8
85H3P12558A3	1.2	6.0	5.8	0.87	6.1	14	29	125	4.1	3MR8

3 phase nema 42 stepper motor

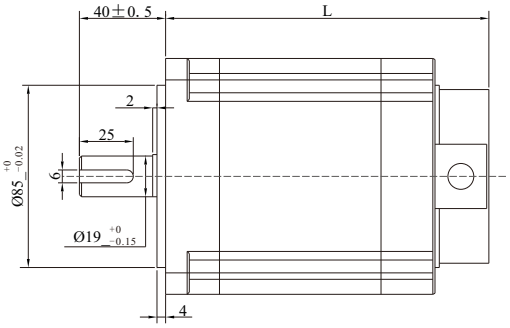

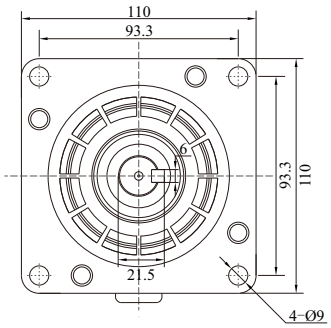

Unit:mm

Model	Step Angel(°)	Holding Torque(Nm)	Current /phase(A)	Resistance (Ω)	Inductance (Mh)	Diameter of axle LB(mm)	Axial length LA(mm)	Length L(mm)	N.W.(kg)	Matched Driver
110H3P0843A3	1.2	8.0	4.3	1.31	17.1	19	36	136	5.7	3MC8H
110H3P1260A3	1.2	12	6	0.66	9.2	19	36	150	6.5	3MC8H
110H3P1665A3	1.2	16	6.5	0.63	8.9	19	36	184	8.7	3MC8H
110H3P2070A3	1.2	20	7	0.67	10.4	19	36	218	11.2	3MC8H

3 phase nema 51 stepper motor

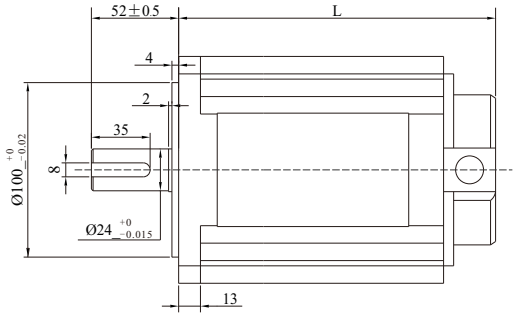

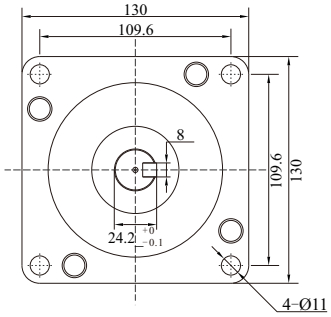

Unit:mm

Model	Step Angel(°)	Holding Torque(Nm)	Current /phase(A)	Resistance (Ω)	Inductance (Mh)	Diameter of axle LB(mm)	Axial length LA(mm)	Length L(mm)	N.W.(kg)	Matched Driver
130H3P2068A3	1.2	20	6.8	0.62	7.8	24	48	168	10	3MC8H
130H3P2868A3	1.2	28	6.8	0.79	10.8	24	48	203	11	3MC8H
130H3P3568A3	1.2	35	6.8	0.97	14.2	24	48	238	12.3	3MC8H
130H3P5068A3	1.2	50	6.8	1.12	18.9	24	48	285	21.5	3MC8H

Nema 17 stepper motor with gear reducer

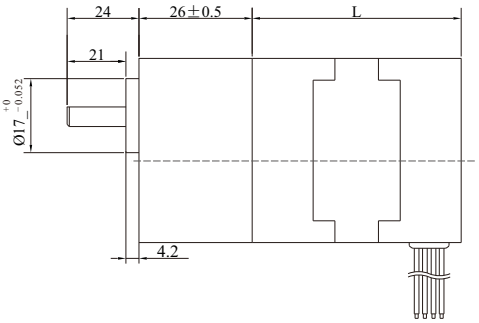

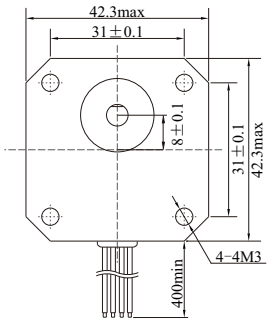

Unit:mm

Model	Step Angel(°)	Holding Torque(Nm)	Current /phase(A)	Resistance (Ω)	Inductance (Mh)	Diameter of axle LB(mm)	Axial length LA(mm)	Length L(mm)	N.W.(kg)	Gear Ratio	Matched Driver
42H2P0712A4-G30	1.8	4.5	0.45	3.2	6	5	21	74	0.3	1:30	MR2

Nema 23 stepper motor with gear reducer

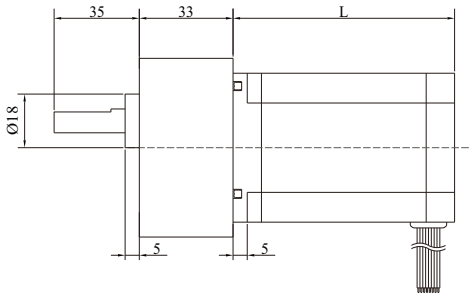

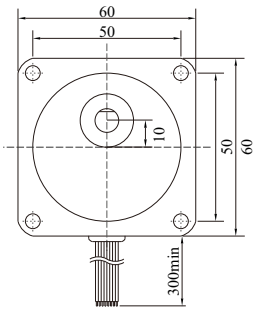

Unit:mm

Model	Step Angel(°)	Holding Torque(Nm)	Current /phase(A)	Resistance (Ω)	Inductance (Mh)	Diameter of axle LB(mm)	Axial length LA(mm)	Length L(mm)	N.W.(kg)	Gear Ratio	Matched Driver
57H2P0930A8-G10	1.8	9	3	1.2	2.2	8	25	108	1.3	1:10	MR4/MR5
57H2P1830A8-G20	1.8	18	3	1.2	2.2	8	25	113	1.3	1:20	MR4/MR5

Nema 34 stepper motor with gear reducer

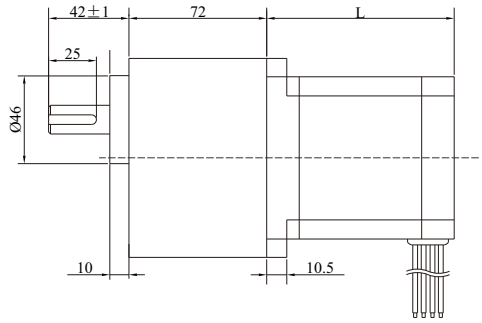

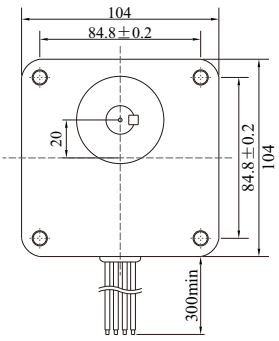

Unit:mm

Model	Step Angel(°)	Holding Torque(Nm)	Current /phase(A)	Resistance (Ω)	Inductance (Mh)	Diameter of axle LB(mm)	Axial length LA(mm)	Length L(mm)	N.W.(kg)	Gear Ratio	Matched Driver
85H2P6045A4-G12.5	1.8	60	4.5	0.65	4.7	15	32	171	5.8	1:12.5	MR7/MR7A
85H2P8045A4-G20	1.8	80	4.5	0.65	4.7	15	32	171	5.8	1:20	MR7/MR7A

Nema 34 stepper motor with gear reducer

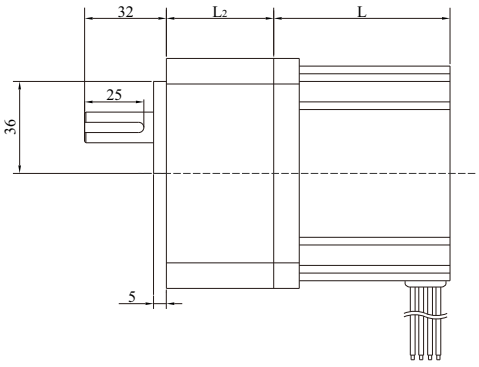

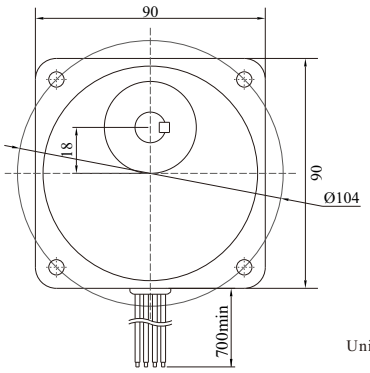

Unit:mm

Model	Step Angel(°)	Holding Torque(Nm)	Current /phase(A)	Resistance (Ω)	Inductance (Mh)	Diameter of axle LB(mm)	Axial length LA(mm)	Length L(mm)	N.W.(kg)	Gear Ratio	Matched Driver
86H2P6842A4-G	1.8	3.2	5.0	0.36	3.0	12	27	69	3.12	1:5 1:10 1:20	MR7/MR7A
85H2P11860A4-G	1.8	6.0	6.0	0.31	2.0	12	27	118	5.02		MR7/MR7A

Nema 17 stepper motor with planetary reducer

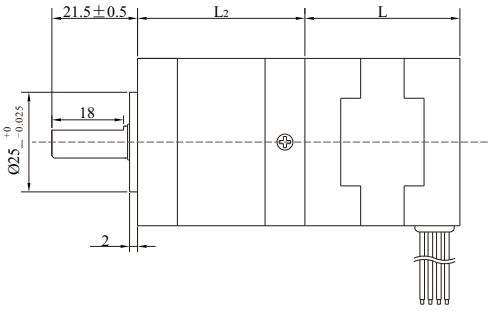

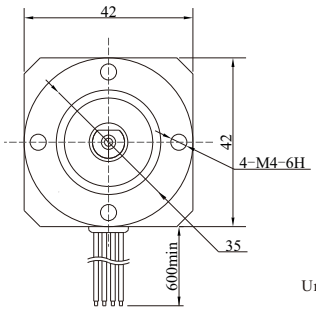

Unit:mm

Model	Step Angel(°)	Holding Torque(Nm)	Current /phase(A)	Resistance (Ω)	Inductance (Mh)	Diameter of axle LB(mm)	Axial length LA(mm)	Length L(mm)	N.W.(kg)	Gear Ratio	Matched Driver
42H2P3412A4-PG05	1.8	0.9	1.2	3.2	4.4	8	19.5	76	0.45	1:05	MR2
42H2P3412A4-PG10	1.8	1.8	1.2	3.2	4.4	8	19.5	76	0.45	1:10	MR2
42H2P3412A4-PG20	1.8	3.5	1.2	3.2	4.4	8	19.5	86	0.52	1:20	MR2
42H2P4812A4-PG05	1.8	2	1.2	3.2	6	8	19.5	90	0.59	1:05	MR2
42H2P4812A4-PG10	1.8	4	1.2	3.2	6	8	19.5	90	0.59	1:10	MR2
42H2P4812A4-PG20	1.8	8	1.2	3.2	6	8	19.5	100	0.65	1:20	MR2

Nema 23 stepper motor with planetary reducer

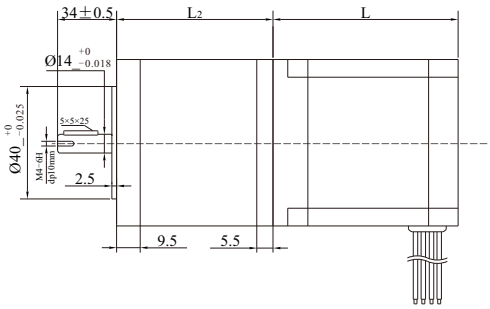

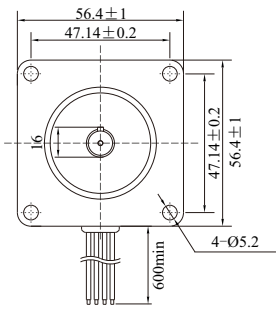

Unit:mm

Model	Step Angel(°)	Holding Torque(Nm)	Current /phase(A)	Resistance (Ω)	Inductance (Mh)	Diameter of axle LB(mm)	Axial length LA(mm)	Length L(mm)	N.W.(kg)	Gear Ratio	Matched Driver
57H2P5442A4-PG05	1.8	5	4.2	0.38	1.3	14	32	107	1.4	1:05	MR4/MR5
57H2P5442A4-PG10	1.8	10	4.2	0.38	1.3	14	32	107	1.4	1:10	MR4/MR5
57H2P5442A4-PG20	1.8	20	4.2	0.38	1.3	14	32	124	1.65	1:20	MR4/MR5
57H2P7842A4-PG05	1.8	9	4.2	0.55	1.9	14	32	131	1.76	1:05	MR4/MR5
57H2P7842A4-PG10	1.8	18	4.2	0.55	1.9	14	32	131	1.76	1:10	MR4/MR5
57H2P7842A4-PG20	1.8	36	4.2	0.55	1.9	14	32	148	2.04	1:20	MR4/MR5

Advanced BLDC motor&drive system

- Wide speed range, flat torque
- Excellent speed stability
- Low power consumption low noise low vibration
- Low cogging torque

BLDC products characters

A variety of speed adjustment modes

BLD drivers support multiple speed adjustment modes:

- Speed setting via PWM
- RS485 control
- Speed setting via pulse frequency
- Speed setting via built-in potentiometer RV
- Speed setting via external potentiometer
- Speed setting via external analog signal (0-5V or 0-10V)

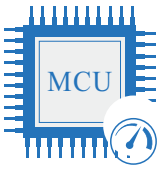

Acceleration and deceleration settings

This potentiometer can be used for adjusting acceleration and deceleration time directly.
Acceleration is the time the motor needs from stationary state to rated speed state; Deceleration time is the time the motor needs from rated speed state to stationary state.
The range can be set is: 0.3s-15s.

Open-loop and closed-loop control modes

In order to improve the stability of speed, BLD has both open-loop and closed-loop control modes.

- Open loop control (default setting) mode: It is advised to be set up in constant load application environment and motor will have good stability of speed, little rush current.
- Closed loop control mode: It is advised to be set up in variable load application environment. It uses feedback signal to bring motor a stable speed.

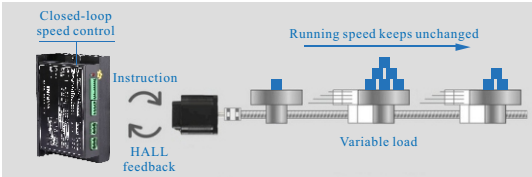

Stalling torque keeping

BLD drivers have stalling torque keeping character.
When the motor is locked suddenly, the torque will be kept .

- Stalling torque can be set in adjustable range.
- The locked rotor torque is the shortest time behavior; it cannot be used as a system brake.

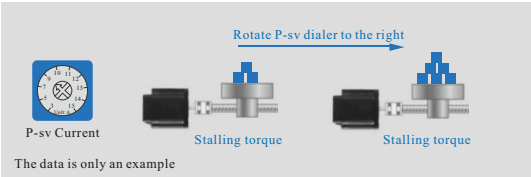

BLD-70
BLDC Motor driver

Product features

- Drive motor under 70W
- Brake and rotation function
- Strong over-current, over-temperature, Hall fault protection
- Easy operation with on board potentiometer or external potentiometer
- Speed setting via external analog
- Compact size

Electrical Specification

Parameters	Min Value	Typical Value	Max Value	Unit
Power supply	12	24	30	VDC
Output current	–	–	3	A
Over voltage protection	–	–	30	VDC
Under voltage protection	12	–	–	VDC
External potentiometer		10K		Ω
Input analog voltage	–	–	5	VDC
Speed control range	–	–	20000	RPM

*Limited by the maximum rated speed of the motor

Machine dimension

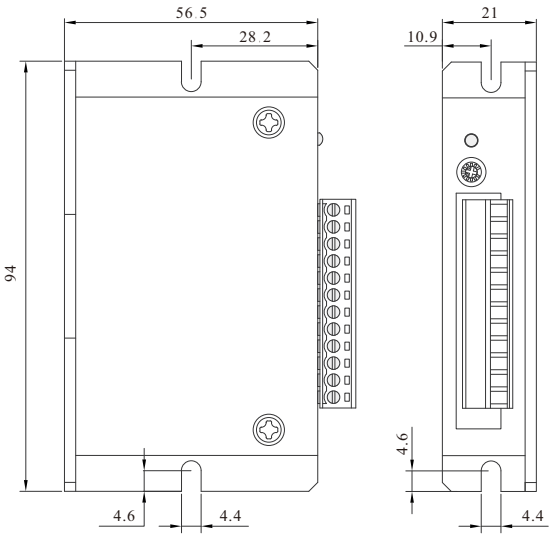

Unit(mm)

Functions setting

Brake setting

BRK and DC- terminal is short circuit in default and the motor will rotate automatically when power is on. Motor will stop if BRK and DC- disconnect.

CW/CCW rotation setting

F/R and DC- disconnect in default, when power is on, motor will start to run clockwise when customers adjust potentiometer.
To control thedirection of the motor, a switch or PLC can be added between F/R and DC-.
Connect F/R and DC-, the motor will rotate anticlockwise, otherwise, the motor will rotate clockwise.

Port signal description

CN5Terminal	Signal category	Functional Description
F/R	Control signal	Motor direction control terminal; F/R and DC- disconnect, motor will rotates clockwise, and otherwise, motor will rotate anticlockwise.
BRK		Motor brake stop control signal; BRK and DC- connect in default, motor brake stops when BRK and DC- disconnect.
SV		External speed setting signal input terminal; when connecting external potentiometer, the middle terminal connects SV, the other two terminals connect to VCC and DC-.
VCC		External potentiometer power (Hall sensor positive electrode)
HU	Hall signal	Hall sensor signal Hu
HV		Hall sensor signal Hv
HW		Hall sensor signal Hw
U	Motor connection	Motor line U phase
V		Motor line V phase
W		Motor line W phase
DC-	Power connection	Power supply negative electrode (Hall sensor negative electrode)
DC+		Power supply positive electrode (12-30VDC)

Driver interface and wiring diagram

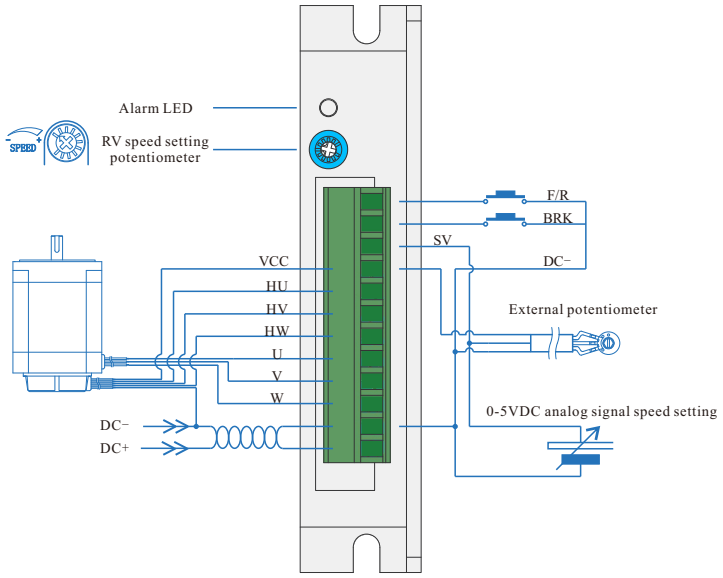

Speed setting via built-in potentiometer

Motor speed increases when RV knobs is rotated clockwise, when anticlockwise, motor speed decreases. If customers use other speed setting modes, RV should be rotated anticlockwise to limit position.

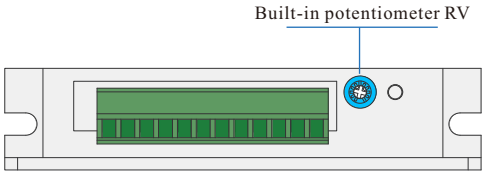

Speed setting via external potentiometer

Use a suitable potentiometer with a resistance value of 10KΩ; when connect external potentiometer, the middle terminal connects to SV, the other two terminals connect to VCC and DC-

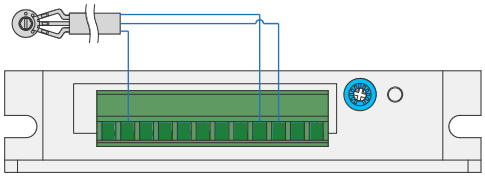

Speed setting via external analog signal

The analog signal voltage can be 0-5VDC; when the voltage is 0.25VDC, the motor speed reaches 5% of fastest speed; when the voltage is 4.7VDC, the motor speed reaches maximum value, which depends on the motor specification and power voltage.

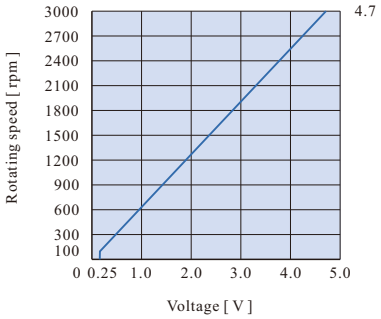

Matched motor

Motor model	Flange size	Output power	Voltage	Rated speed	Rated Torque	Motor length	Detail page
42BLY-0330NBB	42mm	30W	24VDC	3000rpm	0.1Nm	49mm	P37
42BLY-0630NBB	42mm	62W	24VDC	3000rpm	0.2Nm	68mm	P37
57BLY-0730NBB	57mm	69W	24VDC	3000rpm	0.22Nm	67mm	P37
57BLF-0615NBB	57mm	65W	24VDC	1500rpm	0.4Nm	82mm	P37
57BLF-0730NBB	57mm	65W	24VDC	3000rpm	0.22Nm	62mm	P37

BLD-120A
BLDC Motor driver

Product features

- Drive motor under 120W
- Acceleration and deceleration settings
- Power protection function (max current setting)
- Easy operation with external potentiometer
- Speed setting via external analog and PWM
- Compact size

Electrical Specification

Parameters	Min Value	Typical Value	Max Value	Unit
Power supply	12	24	30	VDC
Output current	–	–	8	A
Over voltage protection	–	–	5	V
Under voltage protection	–	20	–	mA
External potentiometer	–	10K	–	Ω
Input analog voltage	–	–	5	VDC
Speed control range	–	–	20000	RPM

*Limited by the maximum rated speed of the motor

Machine dimension

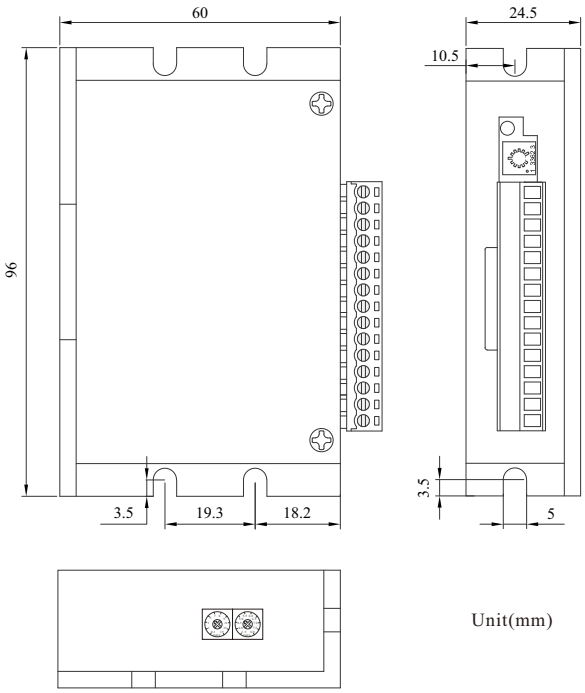

Unit(mm)

Functions setting

Max output current setting

P-sv current setting is for protecting the driver when it runs under over-load condition via over-current alarm. The set current value should be matched with the rated current of the matched motor and real voltage used. The set range: 1.6A-8A.

P-sv Current

Acceleration and deceleration settings

This potentiometer can be used for adjusting acceleration and deceleration time directly. Acceleration is the time the motor needs from stationary state to rated speed state; Deceleration time is the time the motor needs from rated speed state to stationary state. The range can be set is: 0.3s-15s.

ACC/DEC

Port signal description

CN5Terminal	Signal category	Functional Description
BRK	Control signal	Motor brake stop control signal; when BRK and COM connects, motor brake stops.
EN		Motor stop signal port; When EN and COM disconnect, motor stops slowly while when they are connected, motor runs.
F/R		Motor direction control terminal; F/R and COM disconnect, motor will rotates clockwise; otherwise, motor will rotate anticlockwise.
COM		Common port(0V)
SV		External speed setting signal input terminal; when connecting external potentiometer, the middle terminal connects SV, the other two terminals connect to REF and COM.
REF+	Hall signal	BLDC Hall signal power positive pole
HU		Hall sensor signal Hu
HV		Hall sensor signal Hv
HW		Hall sensor signal Hw
REF-		BLDC Hall signal power negative electrode
W	Motor connection	Motor line W phase
V		Motor line V phase
U		Motor line U phase
DC+	Power connection	Power supply positive electrode (12-30VDC)
DC-		Power supply negative electrode (Hall sensor negative electrode)

Driver interface and wiring diagram

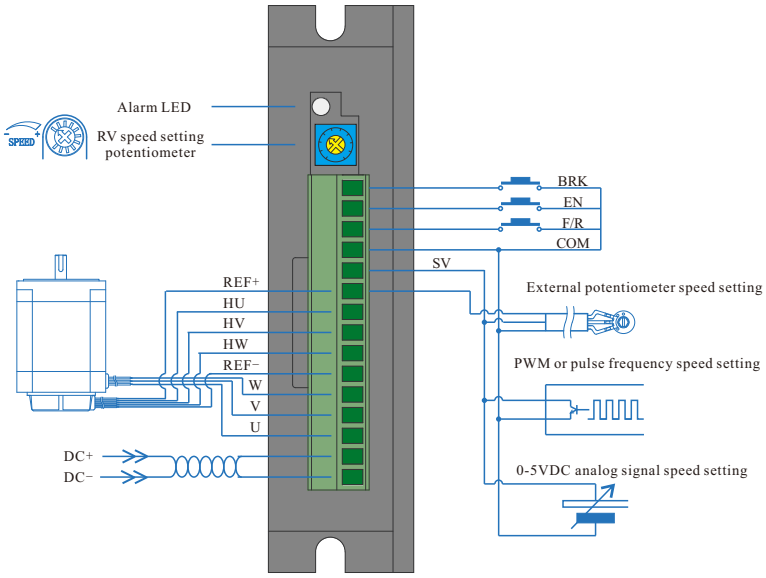

Speed setting via built-in potentiometer

Motor speed increases when RV knobs is rotated clockwise, when anticlockwise, motor speed decreases. If customers use other speed setting modes, RV should be rotated anticlockwise to limit position.

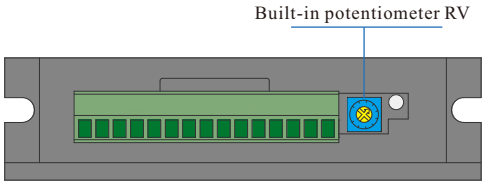

Speed setting via external potentiometer

Use a suitable potentiometer with a resistance value of 10KΩ; when connect external potentiometer, the middle terminal connects to SV, the other two terminals connect to VCC and DC-

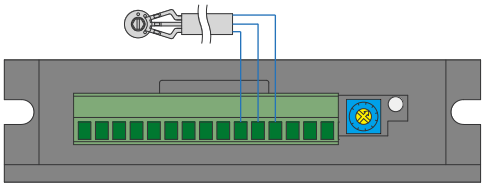

PWM speed setting mode

When customers select PWM speed setting mode, the duty ratio is advised to set as 2%-90%. When duty ratio is 2%, the motor speed reaches 5% of the fastest speed; when the duty ratio is 90%, the motor speed reaches maximum value, which depends on the motor specification and power voltage.(The pulse frequency range: 1-3KHz).

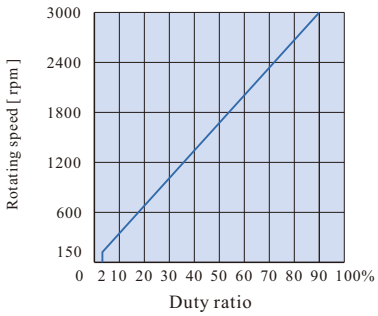

Speed setting via external analog signal

The analog signal voltage can be 0-5VDC; when the voltage is 0.25VDC, the motor speed reaches 5% of fastest speed; when the voltage is 4.7VDC, the motor speed reaches maximum value, which depends on the motor specification and power voltage.

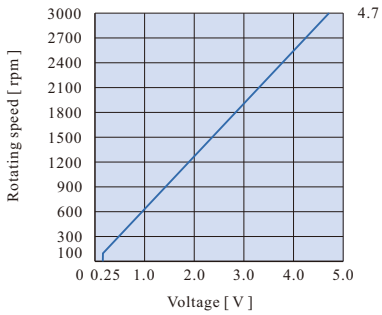

Matched motor

Motor model	Flange size	Output power	Voltage	Rated speed	Rated Torque	Motor length	Detail page
57BLY−0730NBB	57mm	69W	24VDC	3000rpm	0.22Nm	67mm	P37
57BLY−1030NBB	57mm	103W	24VDC	3000rpm	0.33Nm	88mm	P37
57BLY−1230NBB	57mm	120W	24VDC	3000rpm	0.44Nm	107mm	P37
57BLF−0615NBB	57mm	65W	24VDC	1500rpm	0.4Nm	82mm	P37
57BLF−0730NBB	57mm	65W	24VDC	3000rpm	0.22Nm	62mm	P37
57BLF−1230NBB	57mm	125W	24VDC	3000rpm	0.4Nm	80mm	P37

BLD-300B
BLDC Motor driver

Product features

Parameters	Min Value	Typical Value	Max Value	Unit
Power supply	12	48	56	VDC
Output current	–	–	15	A
Over voltage protection	–	–	5	V
Under voltage protection	12	–	–	mA
External potentiometer	–	10K	–	Ω
Input analog voltage	–	–	5	VDC
Speed control range	–	–	20000	RPM

*Limited by the maximum rated speed of the motor

Functions setting

Motor pole pair selection

In order to match different motors, customers have choices for pole pair selection via SW1.
SW1=OFF, 4 pole pairs (default)
SW1=ON, 2 pole pairs

PID closed loop selection

In order to improve the stability of speed when in variable load application environment, customers are advised to select closed loop mode via SW2.
SW2=OFF, open loop (default); SW2=ON, closed loop.

Max output current setting

P-sv current setting is for protecting the driver when it runs under over-load condition via over-current alarm. The set current value should be matched with the rated current of the matched motor and real voltage used. The set range: 3A-15A.

P-sv Current

Acceleration and deceleration settings

This potentiometer can be used for adjusting acceleration and deceleration time directly. Acceleration is the time the motor needs from stationary state to rated speed state; Deceleration time is the time the motor needs from rated speed state to stationary state. The range can be set is: 0.3s-15s.

ACC/DEC

Machine dimension

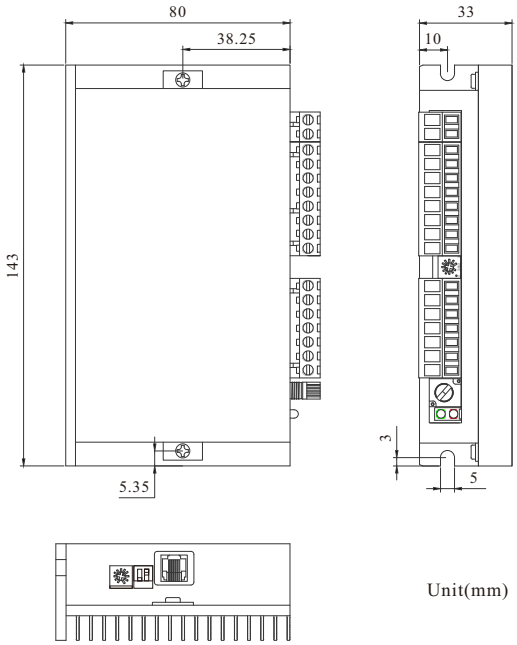

Unit(mm)

Port signal description

CN5Terminal	Signal category	Functional Description
DC+	Power connection	Power supply positive electrode (12-30VDC)
DC-		Power supply negative electrode (Hall sensor negative electrode)
W	Motor connection	Motor line W phase
V		Motor line V phase
U		Motor line U phase
REF+	Hall signal	BLDC Hall signal power positive pole
HW		Hall sensor signal Hw
HV		Hall sensor signal Hv
HU		Hall sensor signal Hu
REF-		BLDC Hall signal power negative electrode
SV	Control signal	External speed setting signal input terminal; when connecting external potentiometer, the middle terminal connects SV, the other two terminals connect to REF and COM.
COM		Common port(0V)
F/R		Motor direction control terminal; F/R and COM disconnect, motor will rotates clockwise; otherwise, motor will rotate anticlockwise.
EN		Motor stop signal port; When EN and COM disconnect, motor stops slowly while when they are connected, motor runs.
BRK		Motor brake stop control signal; BRK and DC- connect in default, motor brake stops when BRK and DC- disconnect.
SPEED	Output signal	Speed signal output port. Pulse frequency is corresponding to the rotating speed
ALM		Alarm signal output port. When fault occurs, the voltage changes to 0V from 5V.

Driver interface and wiring diagram

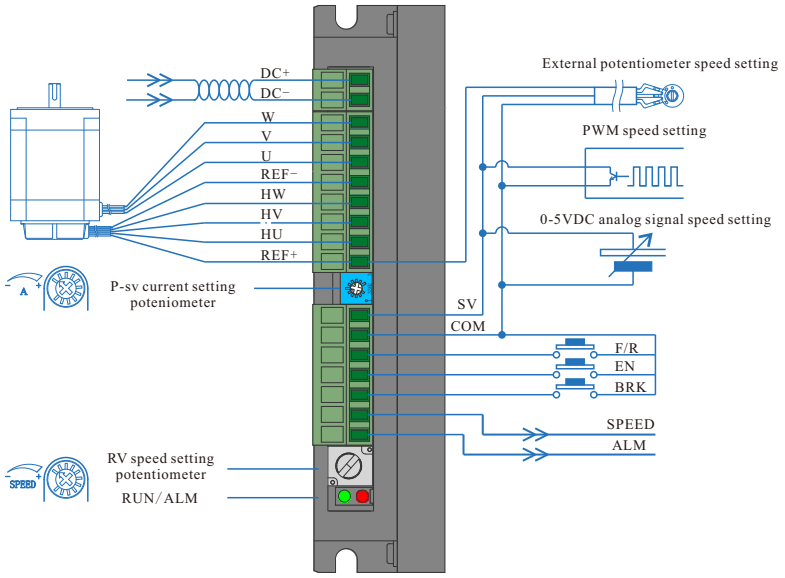

Speed setting via built-in potentiometer

Motor speed increases when RV knobs is rotated clockwise, when anticlockwise, motor speed decreases. If customers use other speed setting modes, RV should be rotated anticlockwise to limit position.

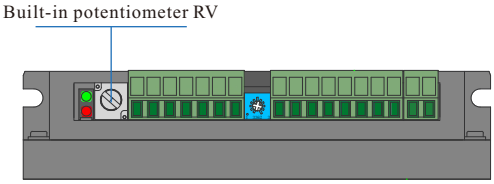

Speed setting via external potentiometer

Use a suitable potentiometer with a resistance value of 10KΩ; when connect external potentiometer, the middle terminal connects to SV, the other two terminals connect to VCC and DC-.

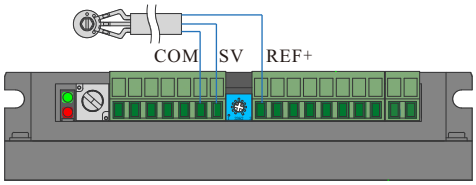

PWM speed setting mode

When customers select PWM speed setting mode, the duty ratio is advised to set as 2%-90%. When duty ratio is 2%, the motor speed reaches 5% of the fastest speed; when the duty ratio is 90%, the motor speed reaches maximum value, which depends on the motor specification and power voltage.(The pulse frequency range: 1-3KHz).

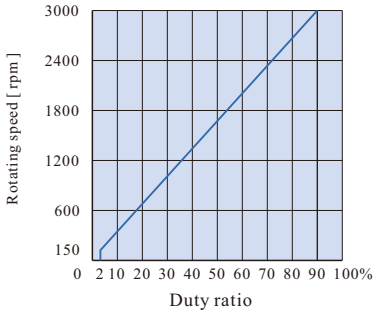

Speed setting via external analog signal

The analog signal voltage can be 0-5VDC; when the voltage is 0.25VDC, the motor speed reaches 5% of fastest speed; when the voltage is 4.7VDC, the motor speed reaches maximum value, which depends on the motor specification and power voltage.

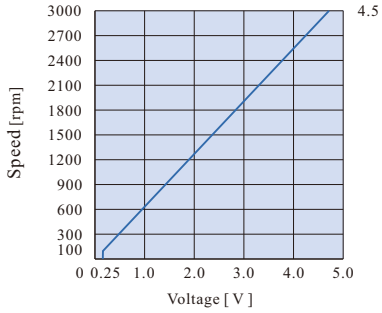

Matched motor

Motor model	Flange size	Output power	Voltage	Rated speed	Rated Torque	Motor length	Detail page
57BLY−1030NBB	57mm	103W	24VDC	3000rpm	0.33Nm	88mm	P37
57BLY−1230NBB	57mm	120W	24VDC	3000rpm	0.44Nm	106mm	P37
57BLF−1230NBB	57mm	120W	24VDC	3000rpm	0.4Nm	80mm	P37
57BLF−1830NBB	57mm	180W	24VDC	3000rpm	0.6Nm	101mm	P37
60BLF−1630NBB	60mm	160W	24VDC	3000rpm	0.5Nm	100mm	P38
60BLF−2430NBB	60mm	240W	24VDC	3000rpm	0.75Nm	120mm	P38

BLD-750
BLDC Motor driver

Product features

Parameters	Min Value	Typical Value	Max Value	Unit
Power supply	18	48	52	VDC
Output current	–	–	25	A
Over voltage protection	–	–	5	V
Under voltage protection	12	–	–	mA
External potentiometer	–	10K	–	Ω
Input analog voltage	–	–	5	VDC
Speed control range	–	–	20000	RPM

*Limited by the maximum rated speed of the motor

Functions setting

PID closed loop selection

In order to improve the stability of speed when in variable load application environment, customers are advised to select closed loop mode via SW1.
SW1=OFF, open loop (default); SW1=ON, closed loop.

Motor pole pair selection

In order to match different motors, customers have choices for pole pair selection via SW2.
SW2=OFF, 4 pole pairs (default)
SW2=ON, 2 pole pairs

Max output current setting

P-sv current setting is for protecting the driver when it runs under over-load condition via over-current alarm. The set current value should be matched with the rated current of the matched motor and real voltage used. The set range: 4A-25A.

P-sv Current

Acceleration and deceleration settings

This potentiometer can be used for adjusting acceleration and deceleration time directly. Acceleration is the time the motor needs from stationary state to rated speed state; Deceleration time is the time the motor needs from rated speed state to stationary state. The range can be set is: 0.3s-15s.

ACC/DEC

Machine dimension

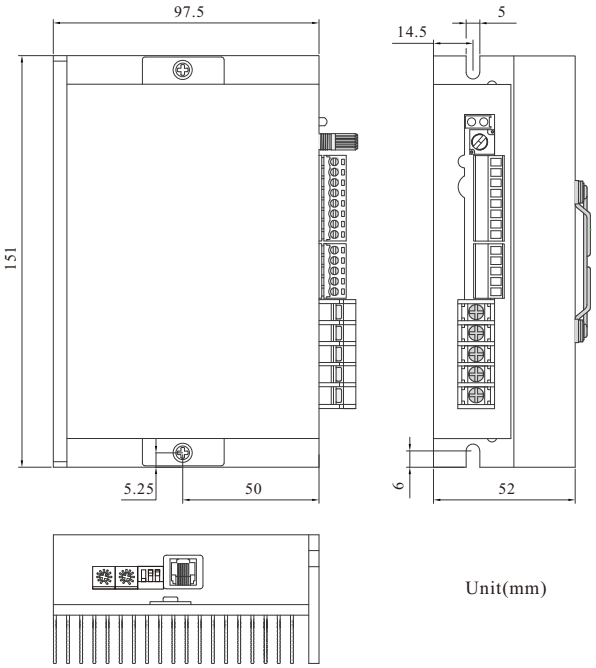

Unit(mm)

Port signal description

CN5Terminal	Signal category	Functional Description
ALM	Output signal	Alarm signal output port. When fault occurs, the voltage changes to 0V from 5V.
SPEED		Speed signal output port. Pulse frequency is corresponding to the rotating speed
BRK	Control signal	Motor brake stop control signal; BRK and DC- connect in default, motor brake stops when BRK and DC- disconnect.
EN		Motor stop signal port; When EN and COM disconnect, motor stops slowly while when they are connected, motor runs.
F/R		Motor direction control terminal; F/R and COM disconnect, motor will rotates clockwise; otherwise, motor will rotate anticlockwise.
COM		Common port(0V)
SV		External speed setting signal input terminal; when connecting external potentiometer, the middle terminal connects SV, the other two terminals connect to VCC and COM.
VCC		External potentiometer power port
REF+	Hall signal	BLDC Hall signal power positive pole
HU		Hall sensor signal Hu
HV		Hall sensor signal Hv
HW		Hall sensor signal Hw
REF-		BLDC Hall signal power negative electrode
U	Motor connection	Motor line U phase
V		Motor line V phase
W		Motor line W phase
DC-	Power connection	Power supply negative electrode (Hall sensor negative electrode)
DC+		Power supply positive electrode (18-52VDC)

Driver interface and wiring diagram

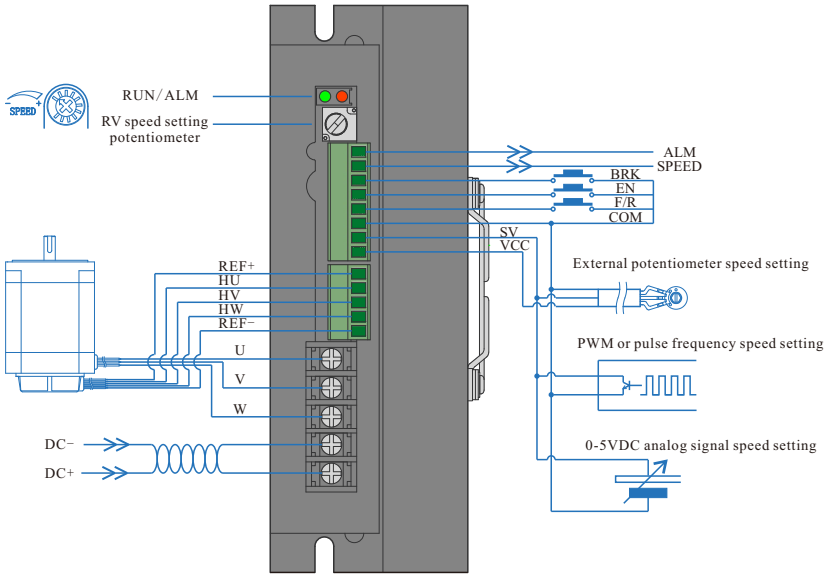

Speed setting via built-in potentiometer

Motor speed increases when RV knobs is rotated clockwise, when anticlockwise, motor speed decreases. If customers use other speed setting modes, RV should be rotated anticlockwise to limit position.

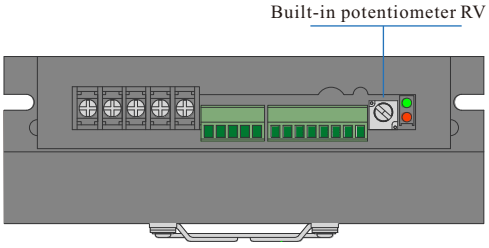

Speed setting via external potentiometer

Use a suitable potentiometer with a resistance value of 10KΩ; when connecting external potentiometer, the middle terminal connects to SV, the other two terminals connect to VCC and COM.

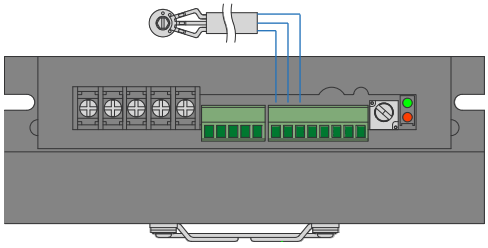

Speed setting via pulse frequency

When selecting this mode, set SW3=ON. The pulse frequency can be 150-4KHz; when the pulse frequency is 150Hz, the motor speed reaches 5% of fastest speed; when the pulse frequency is 4KHz, the motor speed reaches maximum value, which depends on the motor specification and source voltage.

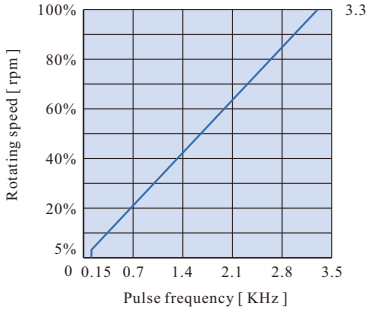

Speed setting via analog voltage

When selecting this mode, set SW3=OFF. The analog signal voltage can be 0-5VDC; when the voltage is 0.25VDC, the motor speed reaches 5% of fastest speed; when the voltage is 4.7VDC, the motor speed reaches maximum value, which depends on the motor specification and source voltage.

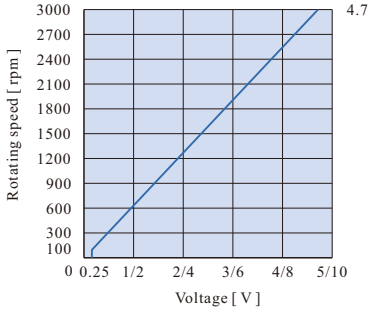

Matched motor

Motor model	Flange size	Output power	Voltage	Rated speed	Rated Torque	Motor length	Detail page
60BLF-1630NBB	60mm	160W	24VDC	3000rpm	0.5Nm	100mm	P38
60BLF-2430LBB	60mm	240W	48VDC	3000rpm	0.75Nm	120mm	P38
70BLF-3230NBB	70mm	320W	48VDC	3000rpm	1.0Nm	120mm	P38
86BLF-2230NBB	86mm	220W	48VDC	3000rpm	0.7Nm	82mm	P39
86BLF-4430NBB	86mm	440W	48VDC	3000rpm	1.4Nm	109mm	P39

BLDH-350
BLDC Motor driver

Product features

Parameters	Min Value	Typical Value	Max Value	Unit
Power supply	180	220	265	VAC
Output current	–	–	4	A
Over voltage protection	–	–	5.5	V
Under voltage protection	12	–	–	mA
External potentiometer	–	10K	–	Ω
Input analog voltage	–	–	5	VDC
Speed control range	–	–	20000	RPM

*Limited by the maximum rated speed of the motor

Functions setting

Speed setting modes selection

Speed setting modes	SW1	SW2
Built-in potentiometer RV	OFF	OFF
External potentiometer/ External analog voltage	ON	OFF
PWM	OFF	ON
Pulse frequency	ON	ON

RS-485 communication port

Driver parameter and instructions setting can be finished by upper computer via RS-485. Customer can set communication via ADDR.

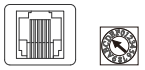

Acceleration and deceleration settings

This potentiometer can be used for adjusting acceleration and deceleration time directly. Acceleration is the time the motor needs from stationary state to rated speed state; Deceleration time is the time the motor needs from rated speed state to stationary state. The range can be set is: 0.3s-15s.

Motor pole pair selection

Pole pair can be set as 2, 4 and 5 via SW5-SW6; the default setting is 4 poles. The setting can also be done by upper computer via RS-485.

PID closed loop selection

SW7, open/closed loop selection; SW7=OFF closed loop, SW7=ON open loop
SW8, closed loop modes selection; SW8=OFF speed closed loop; SW8=ON speed and current closed loop.

Machine dimension

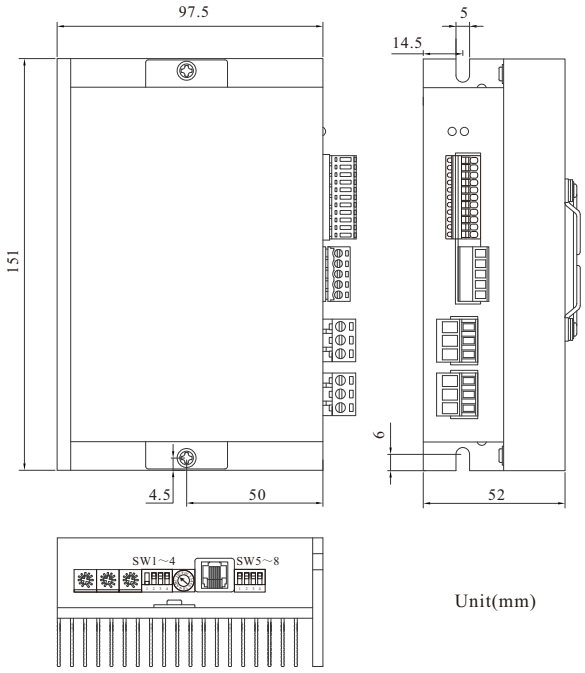

Unit(mm)

Port signal description

CN5Terminal	Signal category	Functional Description
COM	Control signal	Source power common port (PLC 24V output port)
PWM		Pulse frequency/PWM speed setting signal input. SW1 and SW2 are for modes selection.
GND		Control signal grounding screw (common port)
SV		External speed setting signal input terminal; when connecting external potentiometer, the middle terminal connects SV, the other two terminals connect to +5V and GND.
5V+		Built-in 5V voltage port,potentiometer can be connected to it for speeding setting.
SPEED		Speed signal output port(open-drain output). The output is pulse frequency corresponding to the rotating speed
ALM		Alarm signal output port(open-drain output). When fault occurs, the voltage changes from high to low voltage.
ARST		Alarm reset port. If ARST connects with GND, fault alarm will be cleared.
BRK		Motor brake stop control port; BRK and GND connect in default, motor brake stops when BRK and GND disconnect.
EN		Motor stop signal port; When EN and GND disconnect, motor stops slowly while when they connect, motor runs.
F/R		Motor direction control terminal; F/R and GND disconnect, motor will rotates clockwise, and otherwise, motor will rotate anticlockwise.
REF+	Motor connection	BLDC Hall signal power positive pole
HU、HV、HW		Hall sensor signal HU、HV、HW
REF-		BLDC Hall signal power negative electrode
U、V、W		Motor line U、V、W phase
AC1	Power connection	Power supply+ (180-265VAC)
AC2		Power supply-
EG		Grounding screw

Driver interface and wiring diagram

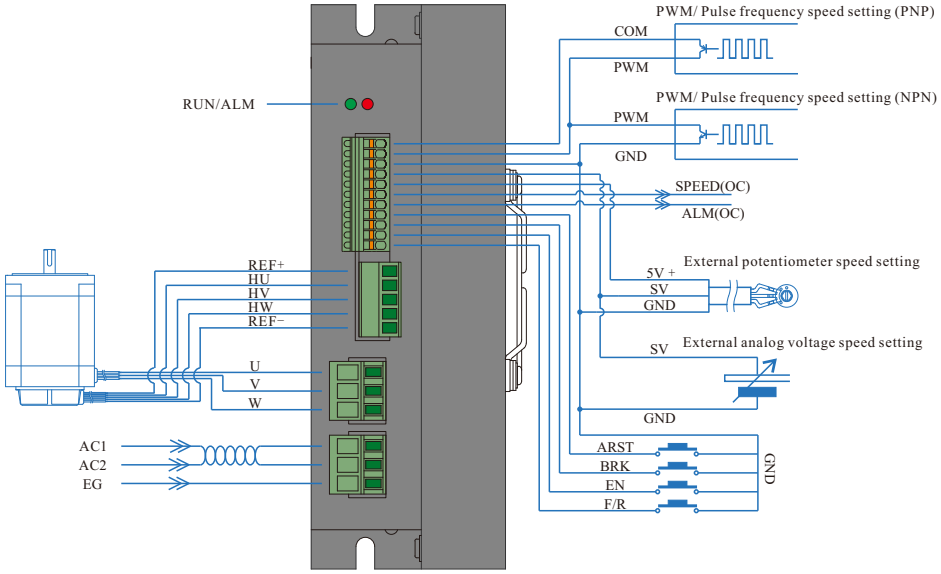

Speed setting via built-in potentiometer

Motor speed increases when RV knobs is rotated clockwise, when anticlockwise, motor speed decreases. If customers use other speed setting modes, RV should be rotated anticlockwise to limit position.

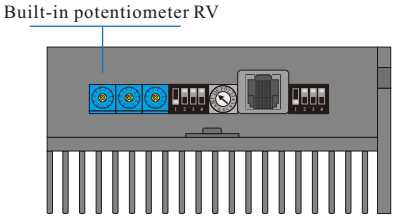

Speed setting via external analog signal

Set SW1=ON and SW2=OFF to select analog voltage speed setting mode. The analog signal voltage can be 0.25-4.7VDC or 0.25-9.4VDC.

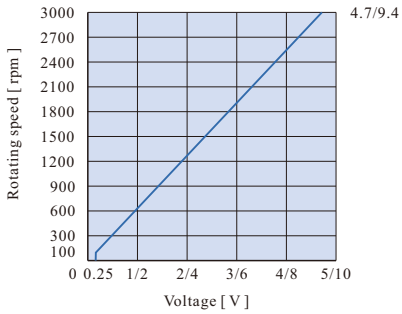

PWM speed setting mode

When customers select PWM speed setting mode, the duty ratio is advised to set as 2%-90%. When duty ratio is 2%, the motor speed reaches 5% of the fastest speed; when the duty ratio is 90%, the motor speed reaches maximum value, which depends on the motor specification and power voltage.(The pulse frequency range: 1-3KHz).

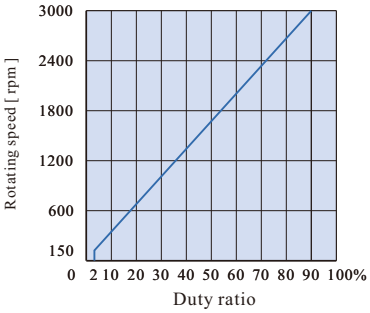

Speed setting via pulse frequency

The pulse frequency can be 200-3.3KHz; when the pulse frequency is 200Hz, the motor speed reaches 5% of fastest speed; when the pulse frequency is 3.3KHz, the motor speed reaches maximum value, which depends on the motor specification and source voltage.

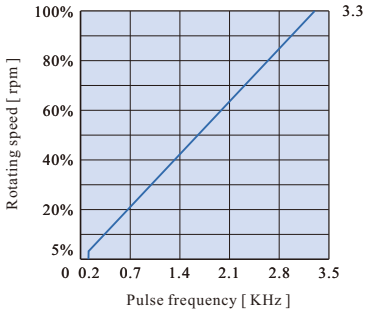

Matched motor

Motor model	Flange size	Output power	Voltage	Rated speed	Rated Torque	Motor length	Detail page
80BLF-2515HBB	80mm	250W	310VDC	1500rpm	1.6Nm	118mm	P38
80BLF-2530HBB	80mm	250W	310VDC	3000rpm	0.8Nm	132mm	P38
86BLF-2230HBB	86mm	220W	310VDC	3000rpm	0.7Nm	82mm	P39
86BLF-3315HBB	86mm	330W	310VDC	1500rpm	2.1Nm	152mm	P39
86BLF-3330HBB	86mm	330W	310VDC	3000rpm	1.05Nm	96mm	P39

BLDH-750
BLDC Motor driver

Product features

Parameters	Min Value	Typical Value	Max Value	Unit
Power supply	180	220	265	VAC
Output current	–	–	8	A
Over voltage protection	–	–	5.5	V
Under voltage protection	12	–	–	mA
External potentiometer	–	10K	–	Ω
Input analog voltage	–	–	5	VDC
Speed control range	–	–	20000	RPM

*Limited by the maximum rated speed of the motor

Functions setting

Speed setting modes selection

Speed setting modes	SW1	SW2
Built-in potentiometer RV	OFF	OFF
External potentiometer/ External analog voltage	ON	OFF
PWM	OFF	ON
Pulse frequency	ON	ON

RS-485 communication port

Driver parameter and instructions setting can be finished by upper computer via RS-485. Customer can set communication via ADDR.


RS-485


ADDR

Acceleration and deceleration settings

This potentiometer can be used for adjusting acceleration and deceleration time directly. Acceleration is the time the motor needs from stationary state to rated speed state; Deceleration time is the time the motor needs from rated speed state to stationary state. The range can be set is: 0.3s-15s.


ACC/DEC

Motor pole pair selection

Pole pair can be set as 2, 4 and 5 via SW5-SW6; the default setting is 4 poles. The setting can also be done by upper computer via RS-485.

PID closed loop selection

SW7, open/closed loop selection; SW7=OFF closed loop, SW7=ON open loop
SW8, closed loop modes selection; SW8=OFF speed closed loop; SW8=ON speed and current closed loop.

Machine dimension

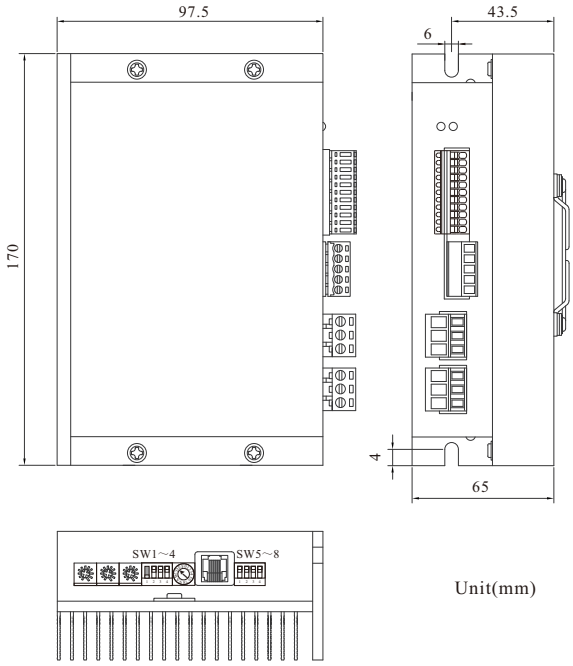

Unit(mm)

Port signal description

CN5Terminal	Signal category	Functional Description
COM	Control signal	Source power common port (PLC 24V output port)
PWM		Pulse frequency/PWM speed setting signal input. SW1 and SW2 are for modes selection.
GND		Control signal grounding screw (common port)
SV		External speed setting signal input terminal;when connecting external potentiometer, the middle terminal connects SV, the other two terminals connect to +5V and GND.
5V+		Built-in 5V voltage port,potentiometer can be connected to it for speeding setting.
SPEED		Speed signal output port(open-drain output). The output is pulse frequency corresponding to the rotating speed
ALM		Alarm signal output port(open-drain output). When fault occurs, the voltage changes from high to low voltage.
ARST		Alarm reset port. If ARST connects with GND, fault alarm will be clear.
BRK		Motor brake stop control port; BRK and GND connect in default, motor brake stops when BRK and GND disconnect.
EN		Motor stop signal port; When EN and GND disconnect, motor stops slowly while when they connect, motor runs.
F/R		Motor direction control terminal; F/R and GND disconnect, motor will rotates clockwise, and otherwise, motor will rotate anticlockwise.
REF+	Motor connection	BLDC Hall signal power positive pole
HU、HV、HW		Hall sensor signal HU、HV、HW
REF-		BLDC Hall signal power negative electrode
U、V、W		Motor line U、V、W phase
AC1	Power connection	Power supply+ (180-265VAC)
AC2		Power supply-
EG		Grounding screw

Driver interface and wiring diagram

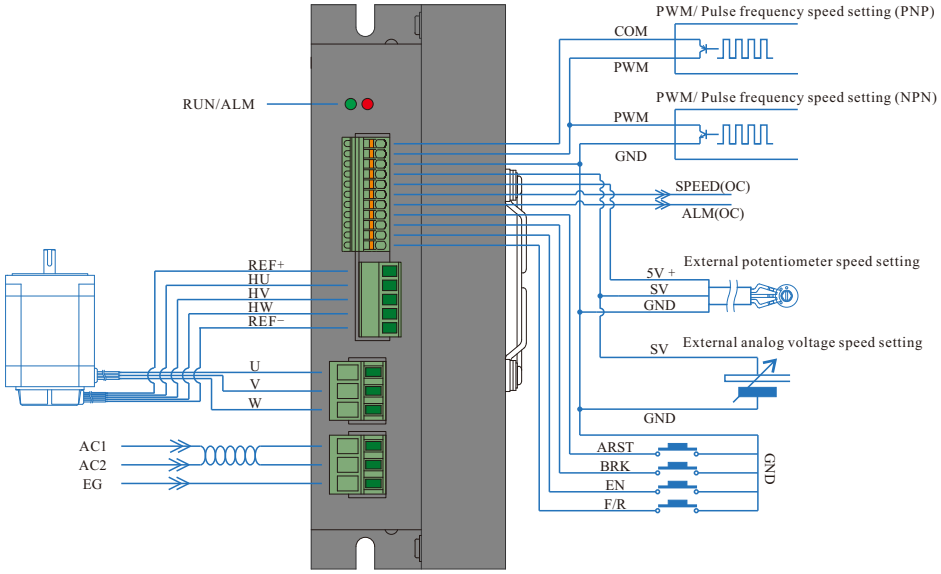

Speed setting via built-in potentiometer

Motor speed increases when RV knobs is rotated clockwise, when anticlockwise, motor speed decreases. If customers use other speed setting modes, RV should be rotated anticlockwise to limit position.

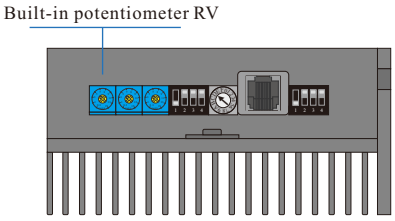

Speed setting via external analog signal

Set SW1=ON and SW2=OFF to select analog voltage speed setting mode. The analog signal voltage can be 0.25-4.7VDC or 0.25-9.4VDC.

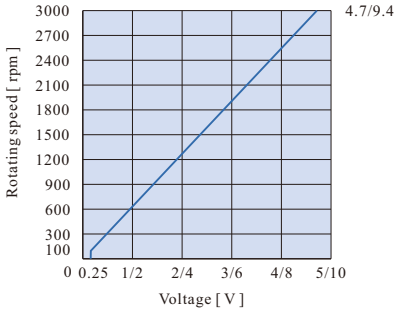

PWM speed setting mode

When customers select PWM speed setting mode, the duty ratio is advised to set as 2%-90%. When duty ratio is 2%, the motor speed reaches 5% of the fastest speed; when the duty ratio is 90%, the motor speed reaches maximum value, which depends on the motor specification and power voltage.(The pulse frequency range: 1-3KHz).

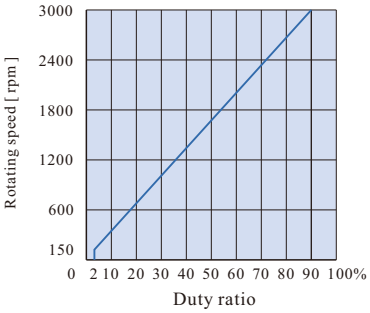

Speed setting via pulse frequency

The pulse frequency can be 200-3.3KHz; when the pulse frequency is 200Hz, the motor speed reaches 5% of fastest speed; when the pulse frequency is 3.3KHz, the motor speed reaches maximum value, which depends on the motor specification and source voltage.

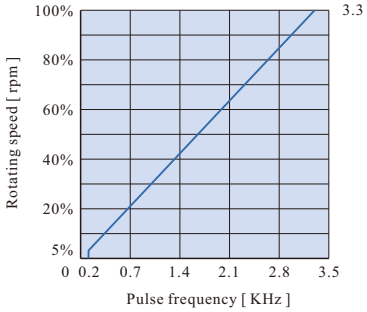

Matched motor

Motor model	Flange size	Output power	Voltage	Rated speed	Rated Torque	Motor length	Detail page
80BLF-5030HBB	80mm	500W	310VDC	3000rpm	1.6Nm	145mm	P38
80BLF-7530HBB	80mm	750W	310VDC	3000rpm	2.5Nm	150mm	P38
86BLF-4030HBB	86mm	400W	310VDC	3000rpm	1.4Nm	112mm	P39
86BLF-5030HBB	86mm	500W	310VDC	3000rpm	1.6Nm	125mm	P39
110BLF-6020HBB	110mm	630W	310VDC	2000rpm	3.0Nm	138mm	P39

42mm BLDC motor

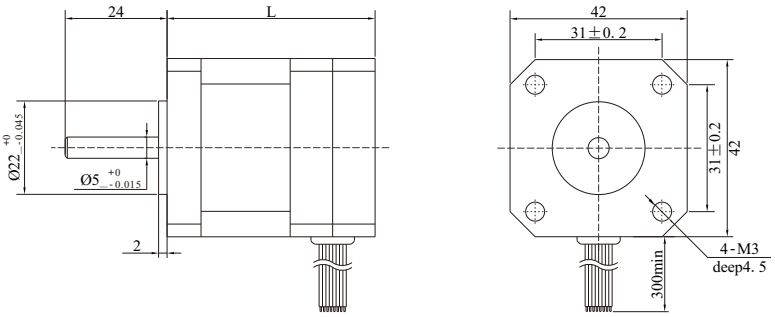

Unit:mm

Model	Output Power(W)	Motor Voltage(VDC)	Rated Speed(RPM)	Rated Torque(Nm)	Motor Length(mm)	N.W.(kg)	Matched Driver
42BLF-0330NBB	30	24	3000	0.1	49	0.33	BLD-70/BLD-120A
42BLF-0630NBB	62	24	3000	0.2	68	0.49	BLD-70/BLD-120A

57mm BLDC motor(Round)

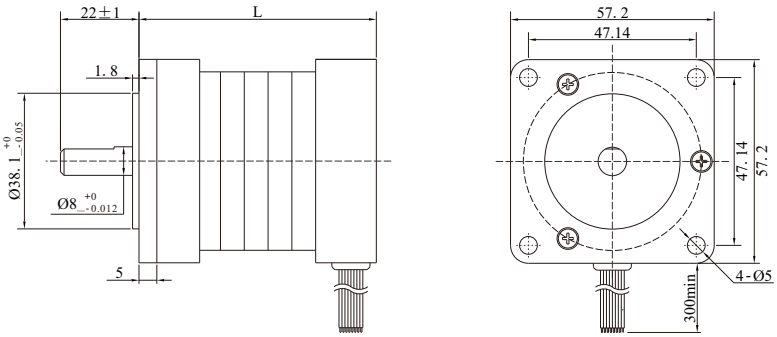

Unit:mm

Model	Output Power(W)	Motor Voltage(VDC)	Rated Speed(RPM)	Rated Torque(Nm)	Motor Length(mm)	N.W.(kg)	Matched Driver
57BLY-0730NBB	69	24	3000	0.22	66.5	0.66	BLD-120A/BLD-300B
57BLY-1030NBB	103	24	3000	0.33	87	0.89	BLD-120A/BLD-300B
57BLY-1230NBB	125	24	3000	0.44	106.5	1.14	BLD-120A/BLD-300B

57mm BLDC motor(Square)

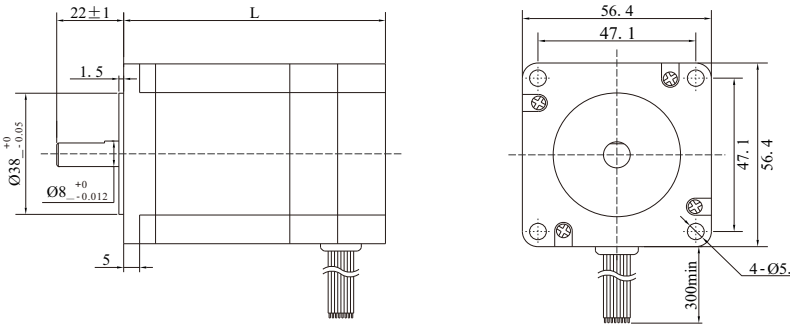

Unit:mm

Model	Output Power(W)	Motor Voltage(VDC)	Rated Speed(RPM)	Rated Torque(Nm)	Motor Length(mm)	N.W.(kg)	Matched Driver
57BLF-0615NBB	65	24	1500	0.4	82	0.95	BLD-120A/BLD-300B
57BLF-0730NBB	65	24	3000	0.22	62	0.65	BLD-70/BLD-120A
57BLF-1230NBB	125	24	3000	0.4	80	0.93	BLD-120A/BLD-300B
57BLF-1830NBB	188	24	3000	0.6	101	1.28	BLD-300B/BLD-750
57BLF-1230HBB	125	310	3000	0.32	80	0.93	BLDH-350
57BLF-1830HBB	188	310	3000	0.64	101	1.28	BLDH-350

60mm BLDC motor

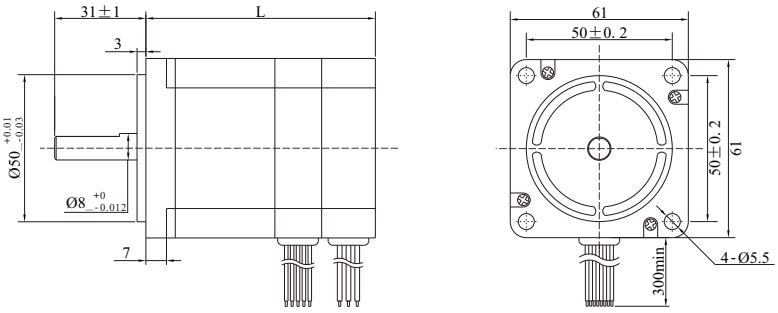

Unit:mm

Model	Output Power(W)	Motor Voltage(VDC)	Rotational Speed(RPM)	Rated Torque(Nm)	Motor Length(mm)	N.W.(kg)	Matched Driver
60BLF-0815NBB	80	24	1500	0.5	100	1.27	BLD-300B/BLD-750
60BLF-0830NBB	80	24	3000	0.25	78	0.86	BLD-300B/BLD-750
60BLF-1630NBB	160	24	3000	0.5	100	1.22	BLD-300B/BLD-750
60BLF-2430LBB	240	48	3000	0.75	120	1.66	BLD-300B/BLD-750

70mm BLDC motor

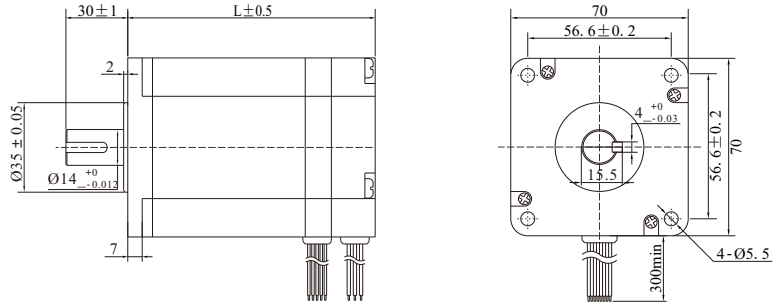

Unit:mm

Model	Output Power(W)	Motor Voltage(VDC)	Rated Speed(RPM)	Rated Torque(Nm)	Motor Length(mm)	N.W.(kg)	Matched Driver
70BLF-3230LBB	320	48	3000	1	120	2.01	BLD-750

80mm BLDC motor

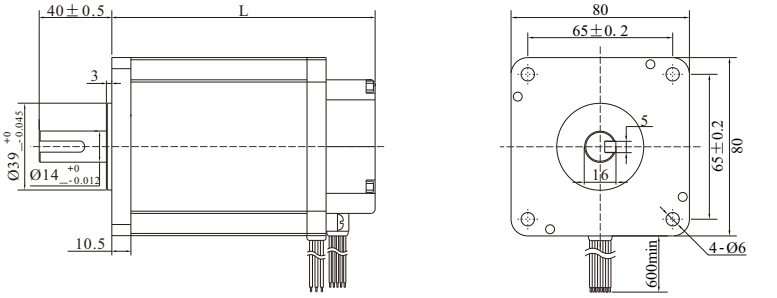

Unit:mm

Model	Output Power(W)	Motor Voltage(VDC)	Rated Speed(RPM)	Rated Torque(Nm)	Motor Length(mm)	N.W.(kg)	Matched Driver
80BLF-7530LBB	750	48	3000	2.5	150	3.0	BLD-750
80BLF-2515HBB	250	310	1500	1.6	145	2.6	BLDH-350
80BLF-2530HBB	250	310	3000	0.8	132.5	2.2	BLDH-350
80BLF-3530HBB	350	310	3000	1.1	132.5	2.2	BLDH-350
80BLF-5030HBB	500	310	3000	1.6	145	2.6	BLDH-750
80BLF-7530HBB	750	310	3000	2.5	150	3.0	BLDH-750

86mm BLDC motor

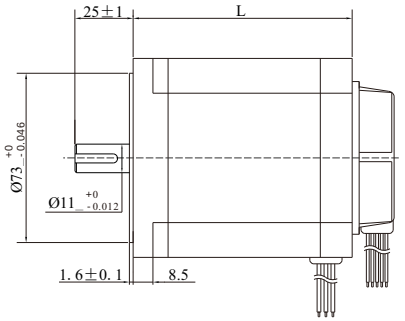

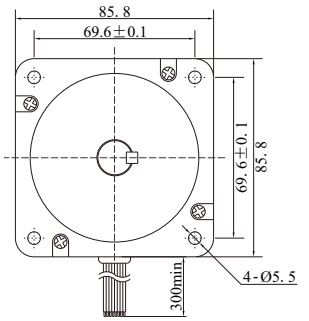

Unit:mm

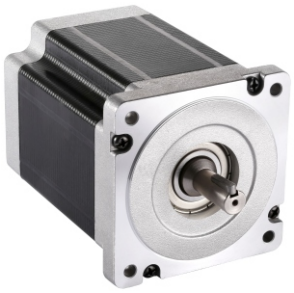

Model	Output Power(W)	Motor Voltage(VDC)	Rated Speed(RPM)	Rated Torque(Nm)	Motor Length(mm)	N.W.(kg)	Matched Driver
86BLF-2230LBB	220	48	3000	0.7	82	1.77	BLD-300B/BLD-750
86BLF-4430LBB	440	48	3000	1.4	112	2.83	BLD-750
86BLF-2230HBB	220	310	3000	0.7	82	1.77	BLDH-350
86BLF-3315HBB	330	310	1500	2.1	152	3.9	BLDH-350
86BLF-3330HBB	330	310	3000	1.05	96	2.30	BLDH-350
86BLF-4030HBB	400	310	3000	1.4	112	2.8	BLDH-750
86BLF-5030HBB	500	310	3000	1.6	125	3.4	BLDH-750

110mm BLDC motor

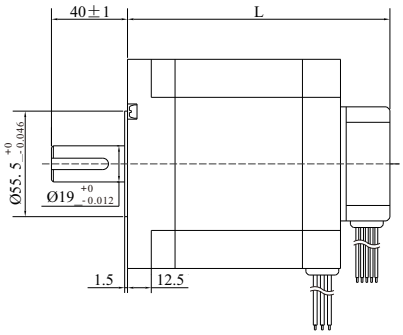

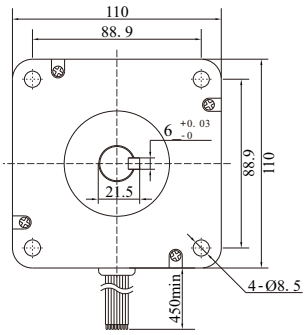

Unit:mm

Model	Output Power(W)	Motor Voltage(VDC)	Rated Speed(RPM)	Rated Torque(Nm)	Motor Length(mm)	N.W.(kg)	Matched Driver
110BLF-6020HBB	630	310	2000	3	138	7.5	BLDH-750
110BLF-12520HBB	1250	310	2000	6	198	9.2	BLDH-750

57mm BLDC gear box motor

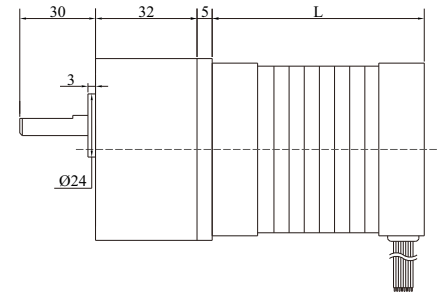

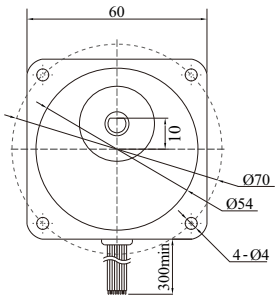

Unit:mm

Model	Output Power(W)	Motor Voltage(VDC)	Rated Speed(RPM)	Rated Torque(Nm)	Gear Ratio	N.W.(kg)	Matched Driver
57BLY-0730NBB-J	69	24	3000	0.2	1:5/1:7.5 1:10/1:15 1:20/1:30	1.2	BLD-120A/BLD-300B
57BLY-1030NBB-J	103	24	3000	0.33		1.48	BLD-120A/BLD-300B

86mm BLDC gear box motor

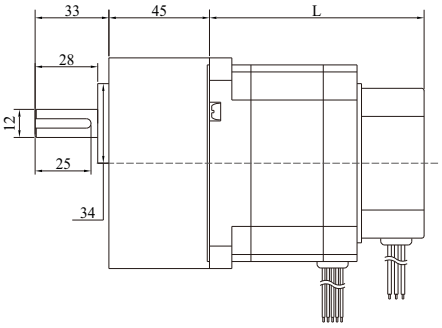

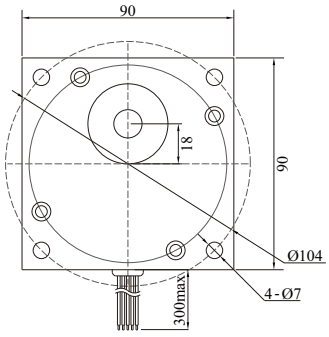

Unit:mm

Model	Output Power(W)	Motor Voltage(VDC)	Rated Speed(RPM)	Rated Torque(Nm)	Gear Ratio	N.W.(kg)	Matched Driver
86BLF-2230NBB-J	220	24	3000	0.7	1:5/1:7.5 1:10/1:15 1:20/1:30	3.16	BLD-300B

The use of eco-paper printing

DONGGUAN ICAN TECHNOLOGY CO.,LTD

Add: 4/F, Block B, RuiLian Zhenxing Industrial Park, Wanjiang District, Dongguan City, Guangdong Province, China

Tel: 086-0769-22327568

Fax: 086-0769-22327578

Website: ican-tech.en.alibaba.com

National service hotline : 400-696-4446

www. ican-tech. com